Feb. 20, 1934. L. V. CASTO 1,947,459

PROCESS OF IMITATING SURFACES

Filed Feb. 29, 1928 2 Sheets-Sheet 2

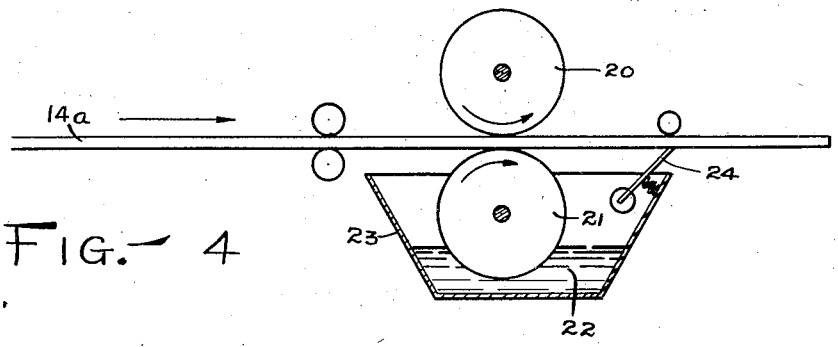

FIG.- 4

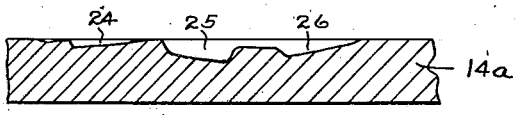

FIG.- 5

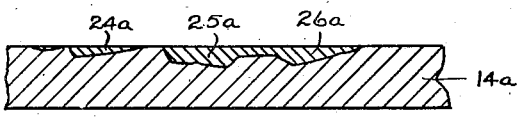

FIG.- 6

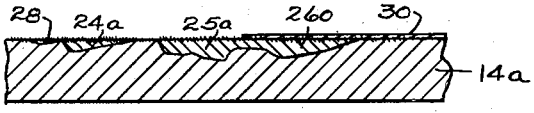

FIG.- 7

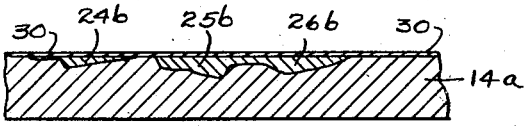

FIG- 8

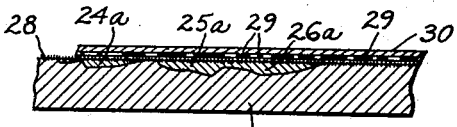

FIG- 9

Inventor

Lloyd V. Casto

By Bates, Macklin, Golrick & Teare

Attorneys