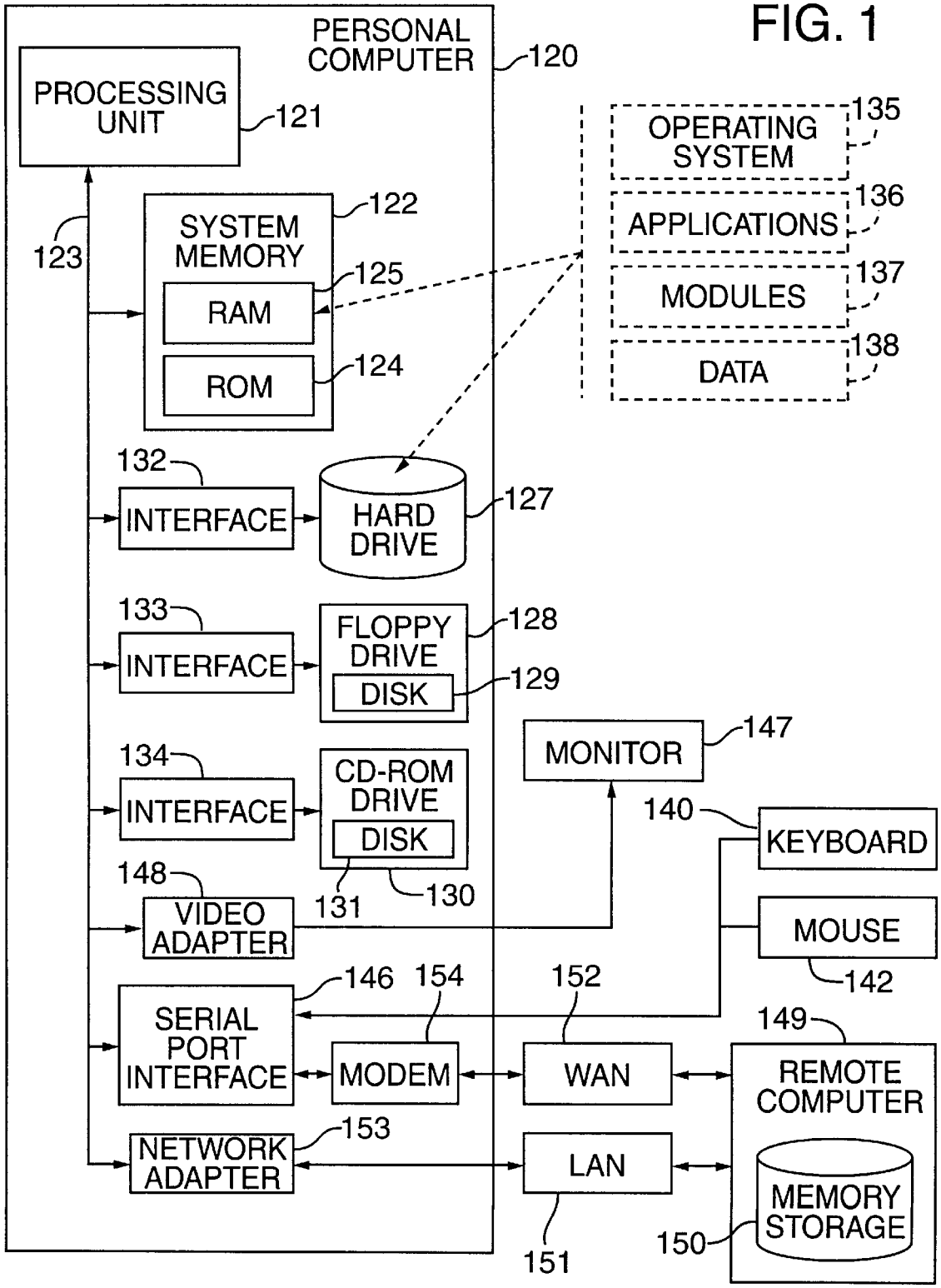
FIG. 1
PERSONAL COMPUTER
120
PROCESSING UNIT
121
123
SYSTEM MEMORY
122
RAM
125
ROM
124
OPERATING SYSTEM
135
APPLICATIONS
136
MODULES
137
DATA
138
132
INTERFACE
HARD DRIVE
127
133
INTERFACE
FLOPPY DRIVE
128
DISK
129
134
INTERFACE
CD-ROM DRIVE
DISK
131
130
MONITOR
147
140
KEYBOARD
MOUSE
142
148
VIDEO ADAPTER
146
154
152
SERIAL PORT INTERFACE
MODEM
WAN
149
REMOTE COMPUTER
MEMORY STORAGE
150
153
NETWORK ADAPTER
LAN
151