US008446359B2

(12) **United States Patent**
Doczy et al.

(10) **Patent No.: US 8,446,359 B2**
(45) **Date of Patent: May 21, 2013**

(54) **INSTRUMENT-ACTIVATED SUB-SURFACE COMPUTER BUTTONS AND SYSTEM AND METHOD INCORPORATING SAME**

(75) Inventors: **Paul J. Doczy**, Cypress, TX (US); **Stacy Wolff**, Cypress, TX (US); **Steven S. Homer**, Tomball, TX (US); **Mark C. Solomon**, Cypress, TX (US)

(73) Assignee: **Hewlett-Packard Development Company, L.P.**, Houston, TX (US)

(*) Notice: Subject to any disclaimer, the term of this patent is extended or adjusted under 35 U.S.C. 154(b) by 1720 days.

(21) Appl. No.: **10/160,201**

(22) Filed: **May 31, 2002**

(65) **Prior Publication Data**

US 2003/0221876 A1 Dec. 4, 2003

(51) **Int. Cl.**
G09G 5/00 (2006.01)
G09G 3/22 (2006.01)
G06F 3/033 (2006.01)

(52) **U.S. Cl.**
USPC **345/156**; 345/179; 345/183

(58) **Field of Classification Search**
USPC 345/169, 173, 183, 180, 156, 179
See application file for complete search history.

(56) **References Cited**

U.S. PATENT DOCUMENTS

3,757,322 A * 9/1973 Barkan et al. 345/174
4,672,154 A * 6/1987 Rodgers et al. 178/19.07
4,730,186 A * 3/1988 Koga et al. 345/179
5,049,862 A * 9/1991 Dao et al. 345/179
5,067,573 A * 11/1991 Uchida 345/173
5,177,328 A * 1/1993 Ito et al. 178/18.03
5,180,891 A * 1/1993 Trumbo 178/19.01
5,231,381 A * 7/1993 Duwaer 345/174
5,369,227 A * 11/1994 Stone 178/19.07
5,389,745 A * 2/1995 Sakamoto 178/18.03
5,444,192 A * 8/1995 Shetye et al. 178/18.09
5,528,266 A * 6/1996 Arbeitman et al. 345/173
5,534,893 A * 7/1996 Hansen et al. 345/179
5,555,157 A * 9/1996 Moller et al. 361/683
5,589,856 A * 12/1996 Stein et al. 345/173
5,734,130 A * 3/1998 Baker 178/18.07
5,889,237 A * 3/1999 Makinwa 178/18.01
6,166,734 A * 12/2000 Nahi et al. 715/748
6,184,863 B1 * 2/2001 Sibert et al. 345/156
6,259,043 B1 * 7/2001 Clary et al. 178/18.01
6,295,372 B1 * 9/2001 Hawkins et al. 382/187
6,504,526 B1 * 1/2003 Mauritz 345/158
6,507,336 B1 * 1/2003 Lunsford 345/168
6,661,399 B1 * 12/2003 Oh et al. 345/87
6,724,372 B1 * 4/2004 Bi et al. 345/179
6,727,894 B1 * 4/2004 Karidis et al. 345/174
6,788,285 B2 * 9/2004 Paolucci et al. 345/156
6,906,701 B1 * 6/2005 Oueslati et al. 345/170
7,113,173 B1 * 9/2006 Bi et al. 345/169
2002/0164976 A1 * 11/2002 Chen et al. 455/414

* cited by examiner

Primary Examiner — M Good Johnson

(57) **ABSTRACT**

The present technique provides a system and method for providing instrument-activated buttons having a sub-surface mechanism for triggering a desired function upon interaction with an above-surface electronic/digital user device, such as a digitizing pointing device. The instrument-activated buttons may be disposed in a display device, a tablet computing device, or any other suitable electronic device. A user navigates a housing surface of the electronic device until a signal identifies the sub-surface button, which may then be activated by performing an instrument-based activation event. The activation event may be a button click, a tip movement, or any other suitable trigger on the electronic/digital user device. A wireless communication is then transmitted between the sub-surface mechanism and the electronic/digital user device to initiate the function associated with the instrument-activated button.
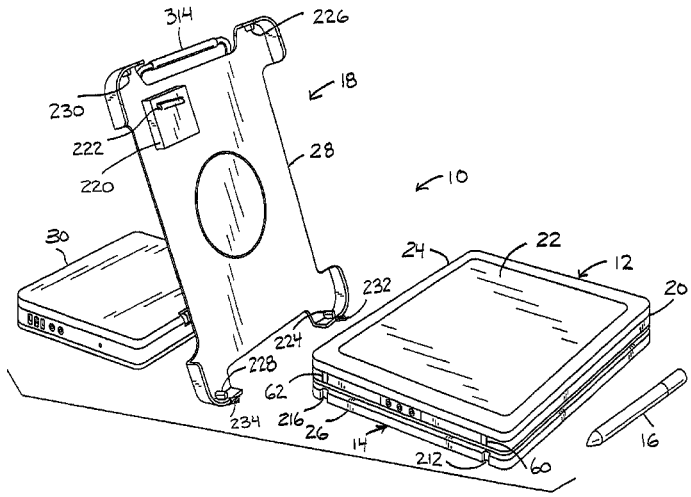
17 Claims, 24 Drawing Sheets