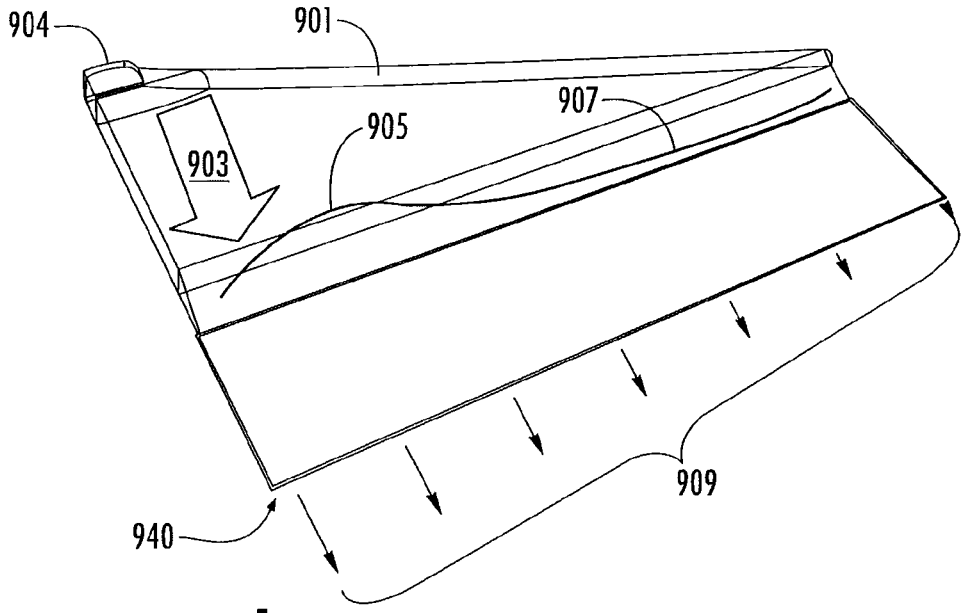

FIG. 1
(PRIOR ART)

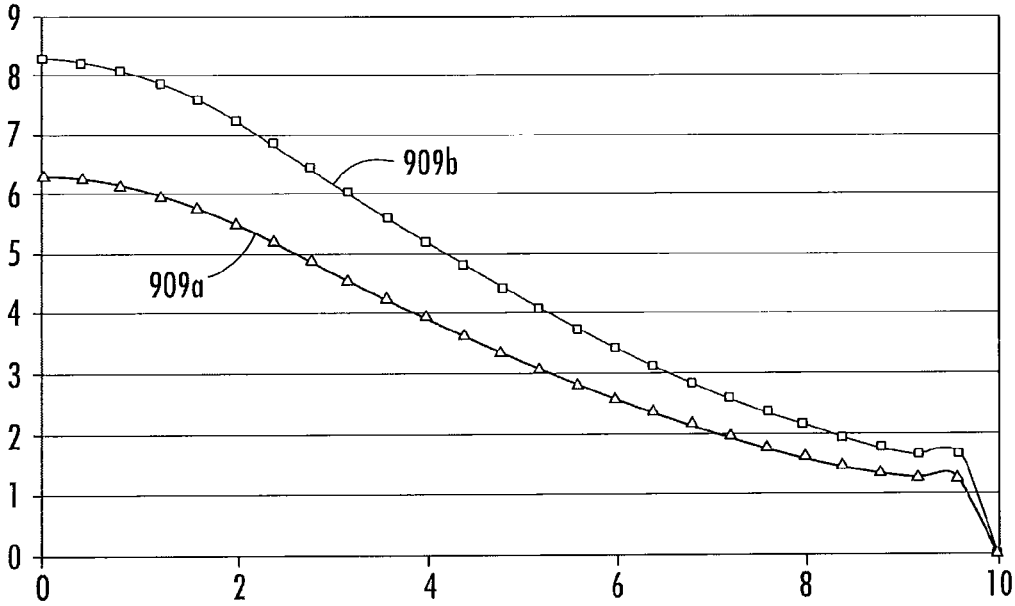

FIG. 1A
(PRIOR ART)