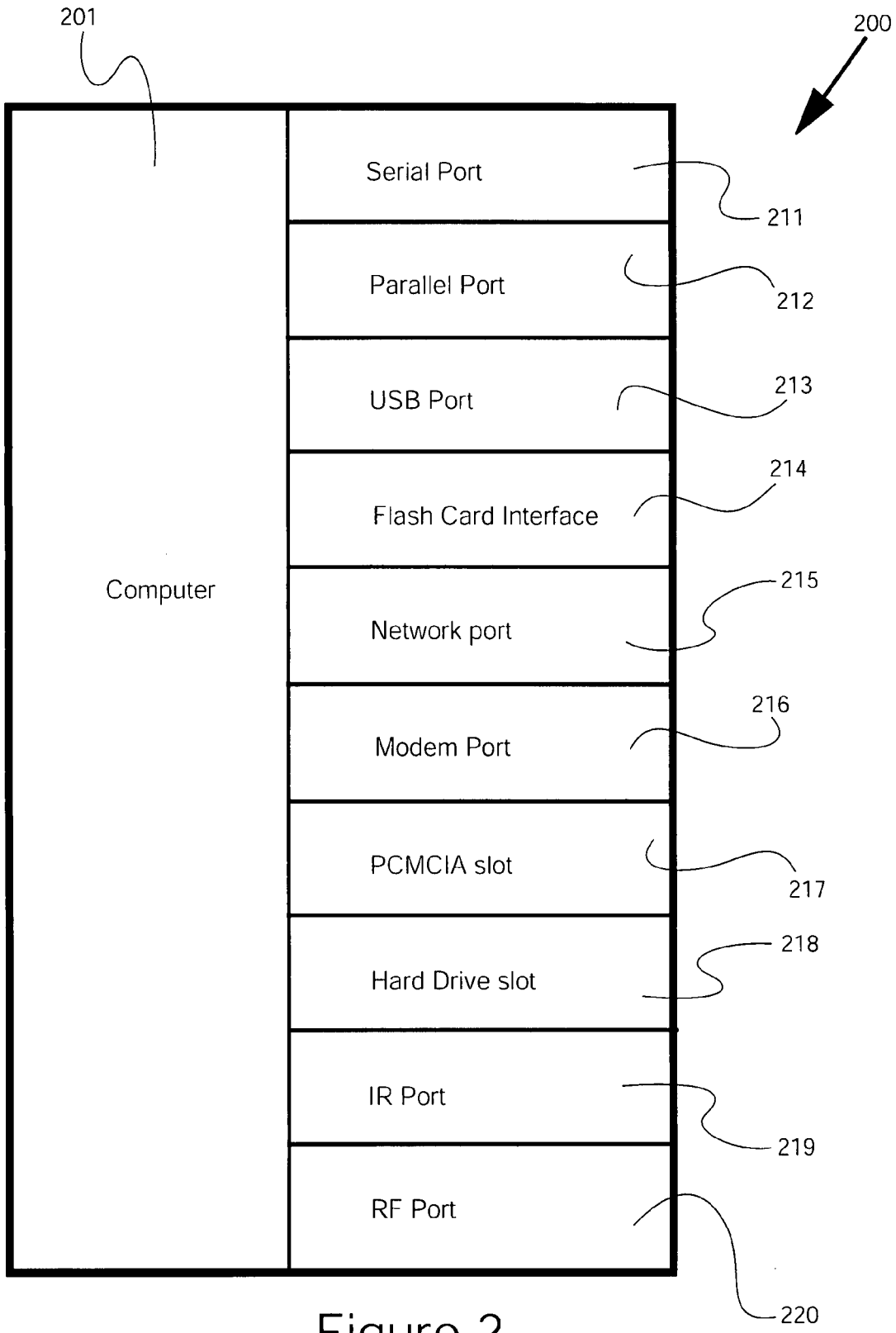

Figure 2
PRIOR ART