US005233459A

United States Patent [19]

Bozler et al.

[11] Patent Number: 5,233,459

[45] Date of Patent: Aug. 3, 1993

[54] ELECTRIC DISPLAY DEVICE

[75] Inventors: **Carl O. Bozler**, Sudbury; **Steven Rabe**, West Roxbury, bot of Mass.

[73] Assignee: **Massachusetts Institute of Technology**, Cambridge, Mass.

[21] Appl. No.: **665,345**

[22] Filed: **Mar. 6, 1991**

[51] **Int. Cl.**[5] **G02B 26/02**

[52] **U.S. Cl.** **359/230**; 359/227; 340/763

[58] **Field of Search** 359/227, 230; 340/763, 340/764

[56] **References Cited**

U.S. PATENT DOCUMENTS

3,746,911	7/1973	Nathanson et al.	315/21
3,772,537	11/1983	Clifford et al.	200/181
3,897,997	8/1975	Kalt	350/161
3,989,357	11/1976	Kalt	350/161
4,074,253	2/1978	Nadir	340/324
4,094,590	7/1978	Kalt	350/269
4,208,103	6/1980	Kalt et al.	350/269
4,229,075	10/1980	Ueda et al.	350/269
4,235,522	11/1980	Simpson et al.	350/266
4,248,501	2/1981	Simpson	350/266
4,266,339	3/1981	Kalt	29/829
4,403,248	9/1983	Te Velde	358/62
4,529,620	7/1985	Glenn	427/88
4,695,837	9/1987	Kalt	340/763
4,729,636	3/1988	Te Velde et al.	350/269
4,741,599	5/1988	Togo et al.	350/269
4,805,038	2/1989	Seligson	358/296
4,807,967	2/1989	Veenvliet et al.	350/269
4,878,122	10/1989	Glenn	358/233
4,879,602	11/1989	Glenn	358/233
4,891,635	1/1990	Hata	340/783
4,948,708	8/1990	Veenvliet et al.	430/316
4,956,619	9/1990	Hornbeck	330/4.3

Primary Examiner—Rodney B. Bovernick
Assistant Examiner—James Phan
Attorney, Agent, or Firm—Hamilton, Brook, Smith & Reynolds

[57] **ABSTRACT**

A bistable electrostatic light valve display in which a movable electrode is disposed opposite a fixed electrode and is biased to move in a preferred direction upon application of an electric field across the electrodes to produce a light valve or light shutter. In one embodiment, the movable electrode is restrained at one end and coils about the fixed end in a preferential roll direction. The bias is achieved by inducing anisotropic stress or anisotropic stiffness. In another embodiment, the moveable electrode is restrained at both ends and is biased upwardly by anisotropic stress or stiffening.
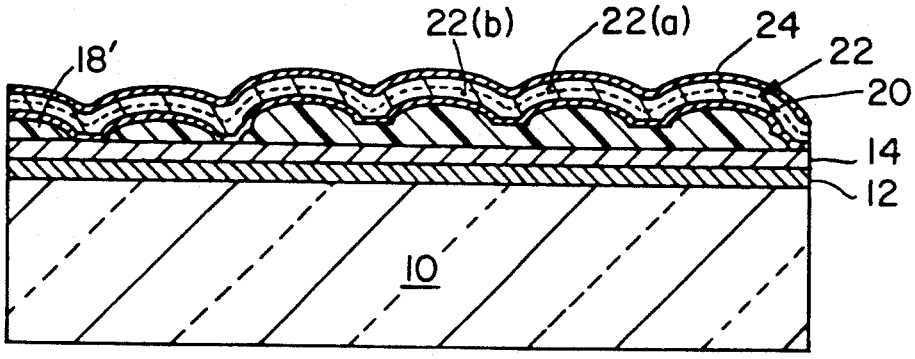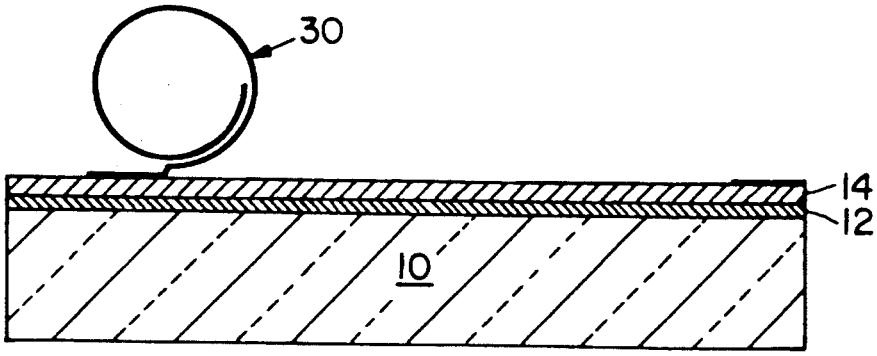
23 Claims, 17 Drawing Sheets