US005632759A

# United States Patent [19]

**Rexroth**

[11] **Patent Number: 5,632,759**

[45] **Date of Patent: *May 27, 1997**

[54] **CUTTING BLADE ASSEMBLY FOR AN ARTHROSCOPIC SURGICAL INSTRUMENT DRIVE SYSTEM**

[75] Inventor: **Fred Rexroth**, Dunedin, Fla.

[73] Assignee: **Linvatec Corporation**, Largo, Fla.

[ * ] Notice: The term of this patent shall not extend beyond the expiration date of Pat. No. 5,269,794.

[21] Appl. No.: **118,851**

[22] Filed: **Sep. 10, 1993**

**Related U.S. Application Data**

[60] Continuation of Ser. No. 437,270, Dec. 4, 1989, Pat. No. 5,269,794, which is a division of Ser. No. 16,140, Feb. 18, 1987, Pat. No. 5,217,478.

[51] **Int. Cl.**[6] ..... **A61B 17/32**; A61B 17/36

[52] **U.S. Cl.** ..... **606/180**; 606/170; 606/167; 606/80

[58] **Field of Search** ..... 606/167–172, 606/174–180, 79.8

[56] **References Cited**

U.S. PATENT DOCUMENTS

| | | |
|---|---|---|
| Re. 30,923 | 5/1982 | Durkee . |
| 1,201,365 | 10/1916 | Shelton . |
| 1,977,263 | 10/1934 | Campbell . |
| 2,637,824 | 5/1953 | Kessel . |
| 2,754,464 | 7/1956 | Wizenez et al. . |
| 3,346,958 | 10/1967 | Sinatra et al. . |
| 3,427,720 | 2/1969 | Berman et al. . |
| 3,673,357 | 6/1972 | Molchan . |
| 3,699,294 | 10/1972 | Sudduth . |
| 3,734,099 | 5/1973 | Bender et al. . |
| 3,749,098 | 7/1973 | De Bennetot . |
| 3,817,237 | 6/1974 | Bolduc . |
| 3,848,336 | 11/1974 | Copeland . |
| 3,921,298 | 11/1975 | Fattaleh . |
| 3,924,631 | 12/1975 | Mancusi, Jr. . |
| 3,959,883 | 6/1976 | Walls et al. . |
| 4,066,851 | 1/1978 | White et al. . |
| 4,066,855 | 1/1978 | Zenk . |
| 4,104,728 | 8/1978 | Kasubuchi . |
| 4,128,889 | 12/1978 | Ojima et al. . |
| 4,216,968 | 8/1980 | Yeeda . |
| 4,220,815 | 9/1980 | Gibson et al. . |
| 4,274,407 | 6/1981 | Scarlett . |
| 4,274,414 | 6/1981 | Johnson et al. . |
| 4,276,024 | 6/1981 | Warrin . |
| 4,320,716 | 3/1982 | Haddad . |
| 4,320,767 | 3/1982 | Villa-Real . |
| 4,321,441 | 3/1982 | Thornburg . |
| 4,360,716 | 11/1982 | Fiorella . |
| 4,424,030 | 1/1984 | Smiley et al. . |
| 4,449,023 | 5/1984 | Hilhorst et al. . |
| 4,470,414 | 9/1984 | Imagawa et al. . |
| 4,593,681 | 6/1986 | Soni . |
| 4,608,215 | 8/1986 | Gonczy et al. . |

(List continued on next page.)

FOREIGN PATENT DOCUMENTS

| | | |
|---|---|---|
| 2304955 | 10/1976 | France . |
| 1036465 | 8/1958 | Germany . |
| 1192365 | 5/1965 | Germany . |
| 2712734 | 9/1978 | Germany . |
| 2840623 | 5/1979 | Germany . |
| 3122062 | 2/1982 | Germany . |
| 373518 | 1/1964 | Switzerland . |
| 2078006 | 12/1981 | United Kingdom . |
| 2093353 | 9/1982 | United Kingdom . |

OTHER PUBLICATIONS

Dentsply–Cavitron litturature: "Powermatic™ Ultrasonic Dental Unit", 1976.

*Primary Examiner*—David M. Shay

[57] **ABSTRACT**

A disposable cutting blade assembly for use with a handpiece having a motor for rotatably driving the cutting blade assembly includes a plastic hub mounted on a proximal end of an outer member. The hub is configured to be received in a bore in the handpiece in a particular orientation relative to blade coding sensors therein. The presence and absence of elements in the hub are detected by the sensors to identify the type of cutting blade received in the handpiece.
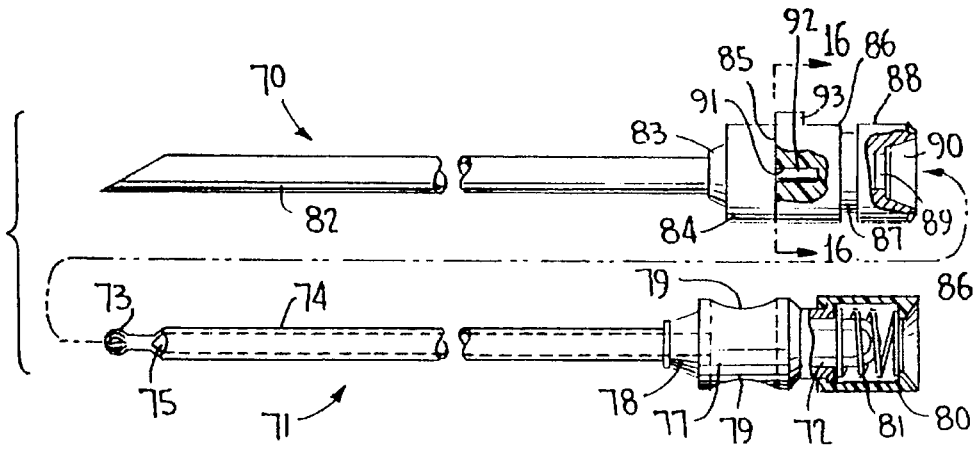
**24 Claims, 3 Drawing Sheets**