US005231559A

United States Patent [19]

Kalt et al.

[11] Patent Number: 5,231,559

[45] Date of Patent: Jul. 27, 1993

[54] FULL COLOR LIGHT MODULATING CAPACITOR

[76] Inventors: **Charles G. Kalt**, P.O. Box 72, N. Adams; **Mark S. Slater**, 510 N. Houghton St., Clarksburg, both of Mass. 01247

[21] Appl. No.: **887,714**

[22] Filed: **May 22, 1992**

[51] **Int. Cl.**[5] **H01G 4/00**; G02F 1/13

[52] **U.S. Cl.** **361/301**; 340/719

[58] **Field of Search** ..... 361/301; 359/59; 340/719; 350/339 F, 345, 344

[56] **References Cited**

U.S. PATENT DOCUMENTS

4,793,691 12/1988 Enomoto et al. ..... 350/339 F
4,808,983 2/1989 Benjamin et al. 340/719
5,041,824 8/1991 DiSanto et al. 340/787
5,146,356 9/1992 Carlson 359/59

Primary Examiner—Donald A. Griffin
Attorney, Agent, or Firm—Handal & Morofsky

[57] **ABSTRACT**

A reflective full color light modulating capacitor having a fixed conductive electrode and an active metalized conductive electrode which is deformed from a relaxed state positioned away from the fixed electrode and a deformed state closer to the fixed electrode, whereby the degree to which the active electrode is deformed from its relaxed state varies in proportion to the magnitude of the voltage potential thereon, the metalization on the active conductive electrode being insulated from the fixed conductive electrode.
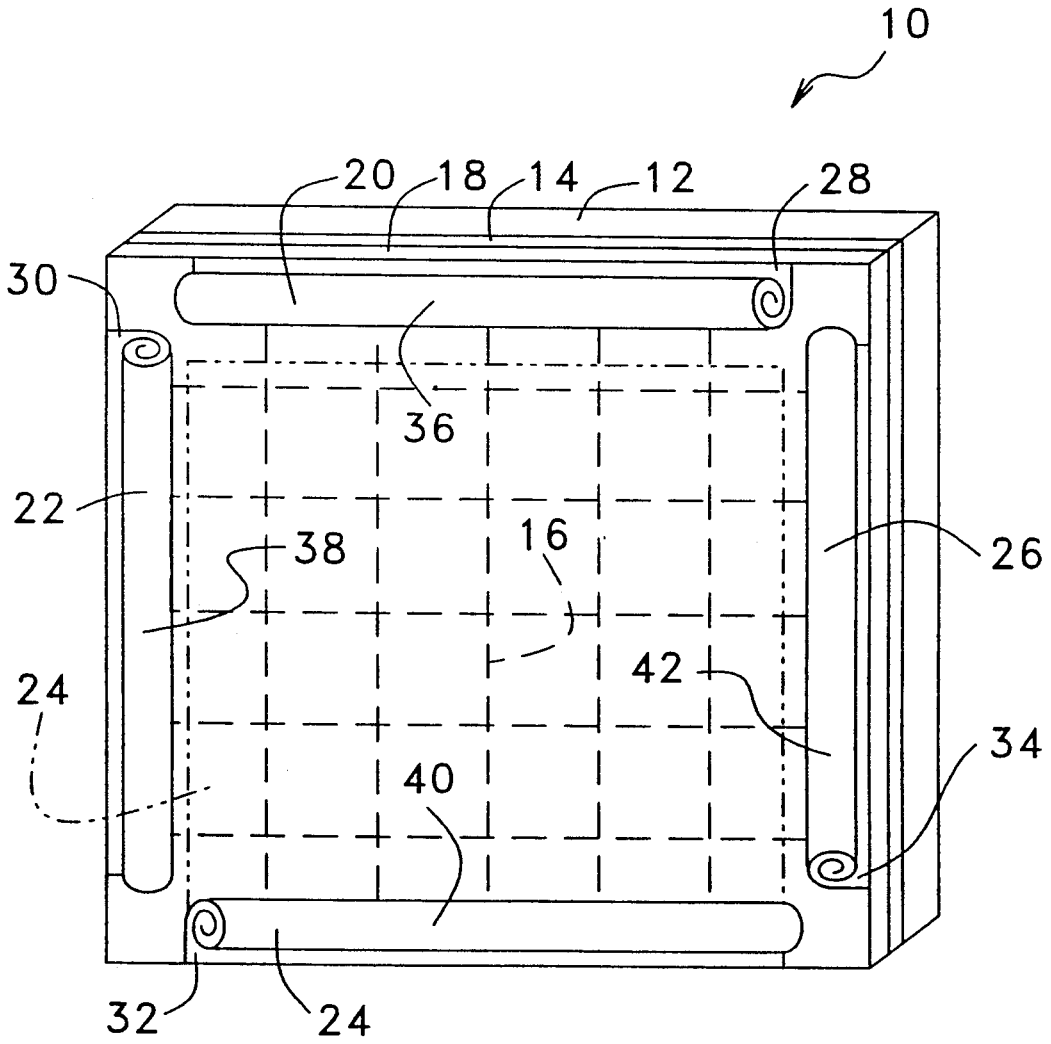
18 Claims, 28 Drawing Sheets