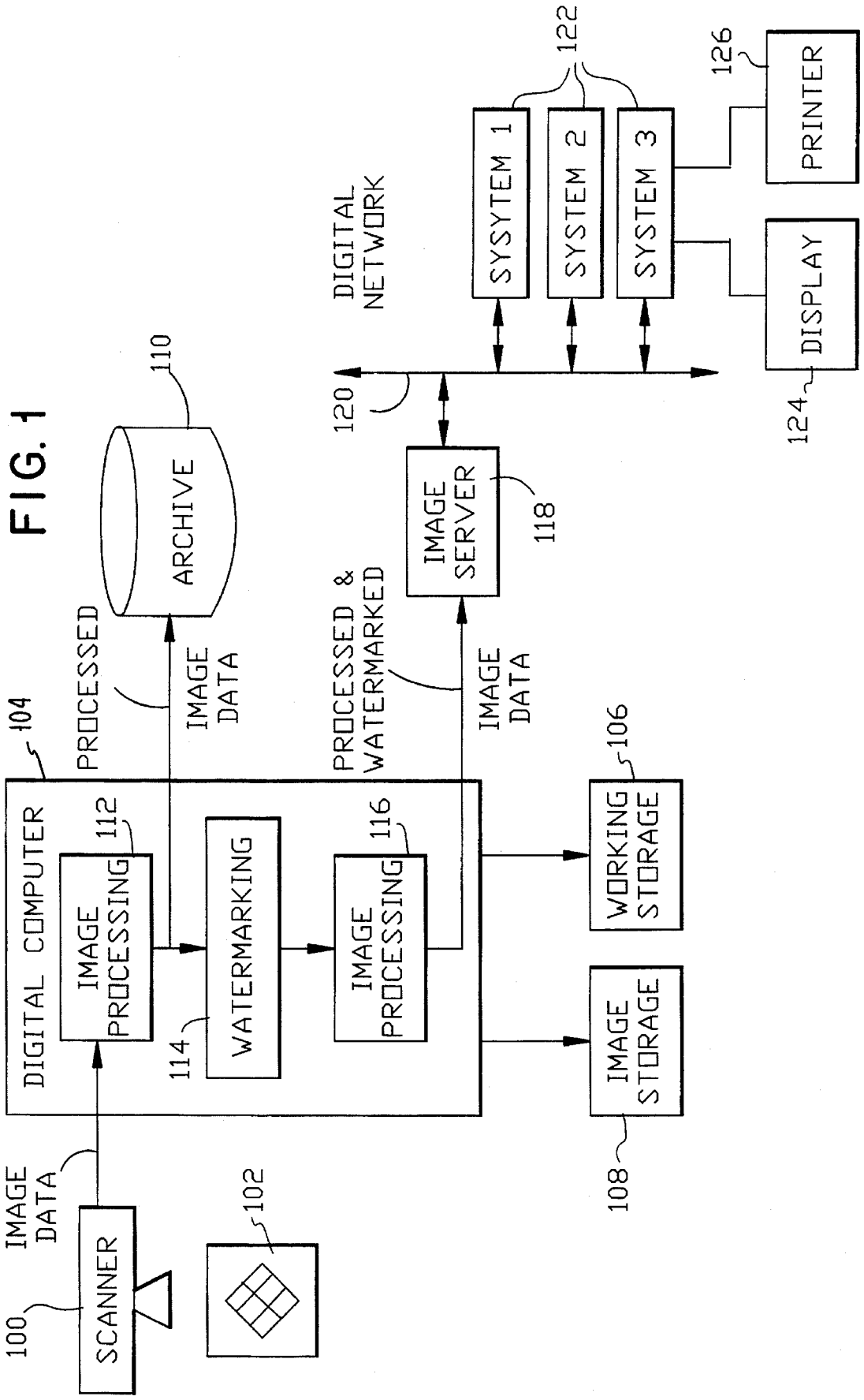
SCANNER
100
IMAGE DATA
102
DIGITAL COMPUTER
104
IMAGE PROCESSING
112
WATERMARKING
114
IMAGE PROCESSING
116
PROCESSED
IMAGE DATA
ARCHIVE
110
PROCESSED & WATERMARKED
IMAGE DATA
IMAGE SERVER
118
WORKING STORAGE
106
IMAGE STORAGE
108
DIGITAL NETWORK
120
SYSYTEM 1
SYSTEM 2
SYSTEM 3
122
DISPLAY
124
PRINTER
126

FIG. 1