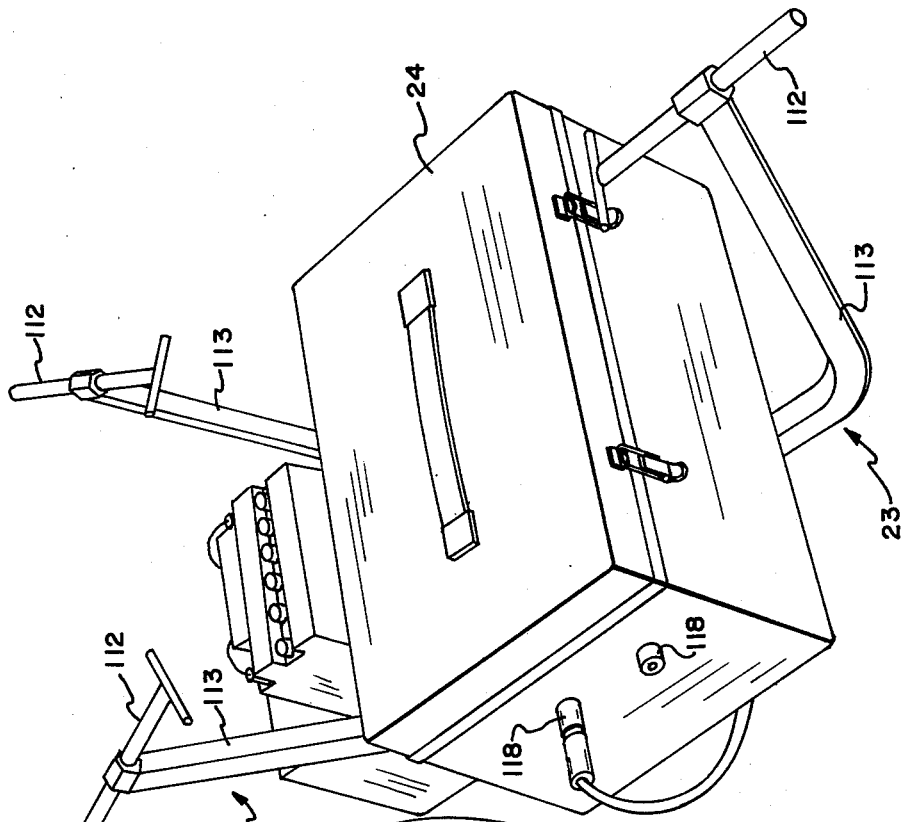
24
112
113
23
118

FIG.—6

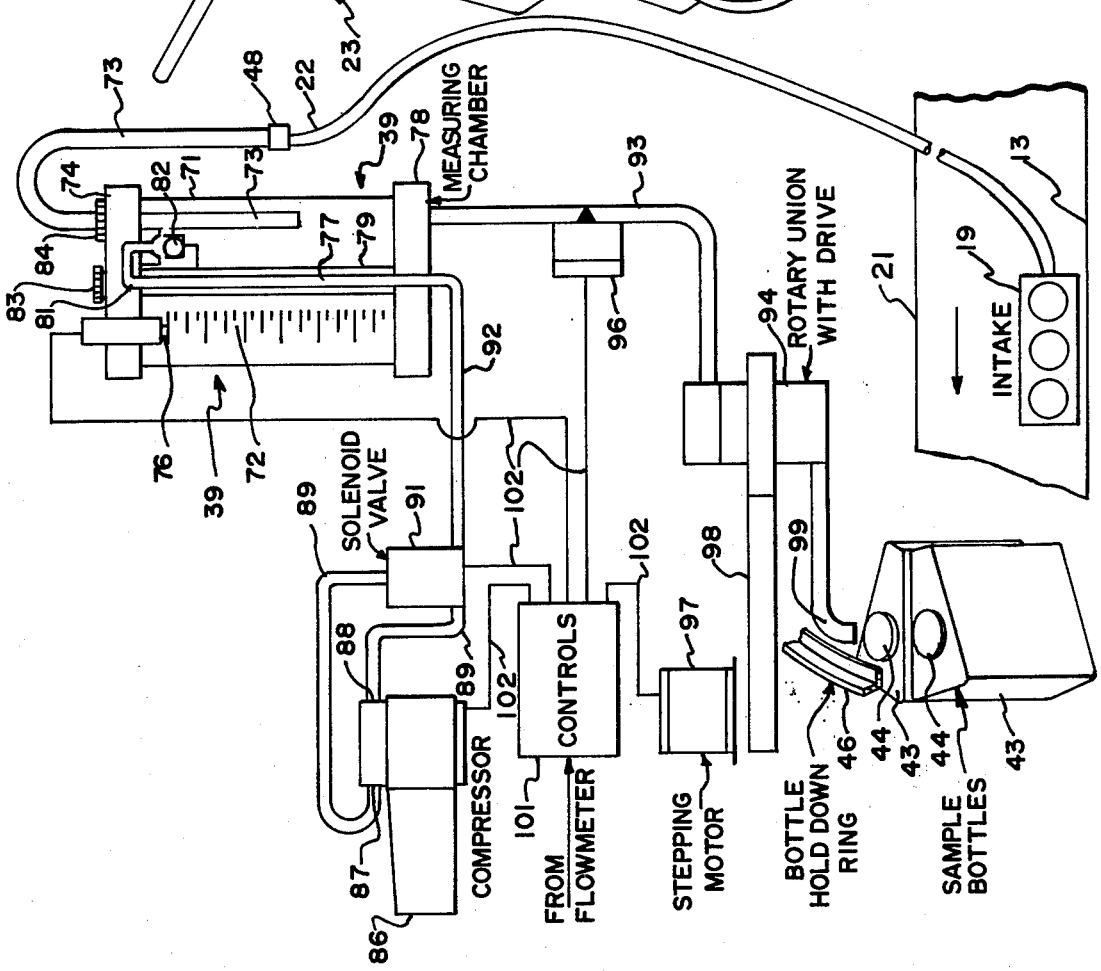
MEASURING CHAMBER
ROTARY UNION WITH DRIVE
INTAKE
SOLENOID VALVE
CONTROLS
COMPRESSOR
FROM FLOWMETER
STEPPING MOTOR
BOTTLE HOLD DOWN RING
SAMPLE BOTTLES

FIG.—4