United States Patent [19]

Theeuwes

[11] **4,320,759**

[45] **Mar. 23, 1982**

[54] **DISPENSER WITH DIFFUSER**

[75] Inventor: **Felix Theeuwes,** Los Altos, Calif.

[73] Assignee: **Alza Corporation,** Palo Alto, Calif.

[21] Appl. No.: **268,046**

[22] Filed: **May 28, 1981**

Related U.S. Application Data

[62] Division of Ser. No. 144,210, Apr. 28, 1980.

[51] **Int. Cl.**[3] **A61M 7/00**

[52] **U.S. Cl.** **128/260**

[58] **Field of Search** 128/260, 127-130

[56] **References Cited**

U.S. PATENT DOCUMENTS

3,760,805	9/1973	Higuchi	128/260
3,929,132	12/1975	Higuchi	128/260
4,111,201	9/1978	Theeuwes	128/260
4,111,202	9/1978	Theeuwes	128/260
4,180,073	12/1979	Michaels	128/260
4,203,439	5/1980	Theeuwes	128/260
4,210,139	7/1980	Higuchi	128/260
4,217,898	8/1980	Theeuwes	128/260

Primary Examiner—C. Fred Rosenbaum

Attorney, Agent, or Firm—Paul L. Sabatine; Edward L. Mandell

[57] **ABSTRACT**

A system is disclosed for delivering a beneficial agent at a substantially constant rate over time. The system comprises (1) a wall formed of a microporous polymer, or (2) a wall formed in part of a microporous polymer with the remaining part of the wall formed of a semipermeable polymer. The wall in (1) surrounds a compartment comprising a flexible partition that separates the compartment into a first space containing the beneficial agent and a second space containing a swellable polymer. The wall in (2) surrounds a compartment comprising a flexible partition that separates the compartment into a first space in contact with the microporous wall and containing the beneficial agent, and a second space in contact with the semipermeable polymer containing an osmotically effective solute, or a swellable polymer. In operation, agent is delivered from the system by (a) fluid diffusing through the microporous wall into the second space causing the polymer to swell, or by (b) fluid being imbibed through the semipermeable wall into the second space causing the solute to dissolve and form a solution, or causing the polymer to swell, wherein in (a) or (b), the second space expands against the partition urging it to move into the first space and maintain the agent in a saturated state at the microporous wall, with the agent diffusing from the first space through fluid filled micropaths in the wall from the system at a substantially zero order rate over a prolonged period of time.
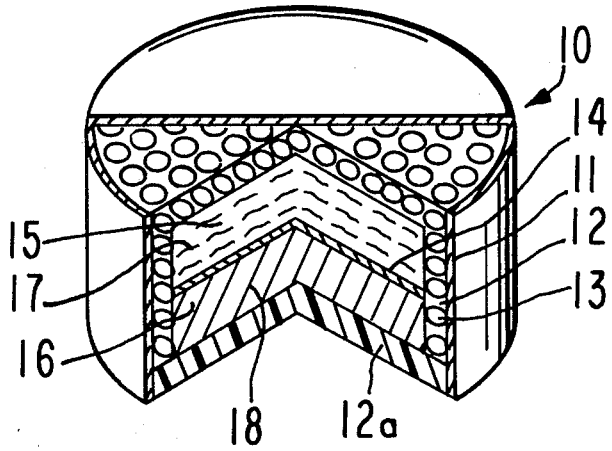
8 Claims, 6 Drawing Figures