US009918859B2

(12) **United States Patent**
Cummins et al.

(10) **Patent No.: US 9,918,859 B2**
(45) **Date of Patent: Mar. 20, 2018**

(54) **TERMINATION ASSEMBLY FOR VASCULAR INTERVENTION DEVICE DELIVERY SYSTEM**

(71) Applicant: **Cook Medical Technologies LLC**, Bloomington, IN (US)

(72) Inventors: **Sean Cummins**, Limerick (IE); **Darach McGrath**, Tipperary (IE)

(73) Assignee: **Cook Medical Technologies LLC**, Bloomington, IN (US)

(*) Notice: Subject to any disclaimer, the term of this patent is extended or adjusted under 35 U.S.C. 154(b) by 174 days.

(21) Appl. No.: **14/832,247**

(22) Filed: **Aug. 21, 2015**

(65) **Prior Publication Data**

US 2016/0074193 A1 Mar. 17, 2016

Related U.S. Application Data

(60) Provisional application No. 62/050,388, filed on Sep. 15, 2014.

(51) **Int. Cl.**

A61F 2/95	(2013.01)
A61F 2/962	(2013.01)
A61F 2/844	(2013.01)
A61F 2/966	(2013.01)
A61B 17/00	(2006.01)

(52) **U.S. Cl.**

CPC ***A61F 2/95*** (2013.01); ***A61F 2/844*** (2013.01); ***A61F 2/962*** (2013.01); ***A61F 2/966*** (2013.01); *A61B 2017/00407* (2013.01); *A61F 2002/9517* (2013.01); *A61F 2230/0069* (2013.01)

(58) **Field of Classification Search**

CPC A61F 2002/9517; A61F 2/962; A61F 2/95–2/97; A61F 2/01; A61F 2/013; A61F 2002/30713; A61B 2017/00407; A61B 90/92; A61M 25/0133; A61M 25/0147

See application file for complete search history.

(56) **References Cited**

U.S. PATENT DOCUMENTS

6,190,360	B1	2/2001	Iancea et al.
6,238,402	B1	5/2001	Sullivan, III et al.
7,967,829	B2	6/2011	Gunderson et al.
7,976,574	B2	7/2011	Papp

(Continued)

FOREIGN PATENT DOCUMENTS

EP	2431009	3/2012
WO	2008034793	3/2008

Primary Examiner — Eric Rosen
Assistant Examiner — Brooke Labranche
(74) *Attorney, Agent, or Firm* — Leill & McNeil

(57) **ABSTRACT**

A vascular intervention device delivery system includes a thumbwheel rotatably mounted in a handle. A termination assembly is mechanically connected to the handle. A catheter extends through the termination assembly and has a proximal end attached to the handle, and a distal carrier segment for mounting a vascular intervention device. A retractable sheath is movable from a first position covering the distal carrier segment to a second position refracted proximally to uncover the distal carrier segment. A pull extends between the thumbwheel and the retractable sheath, and through the termination assembly. A stability sheath that receives the pull and the inner catheter has a proximal end that terminates in the termination assembly.
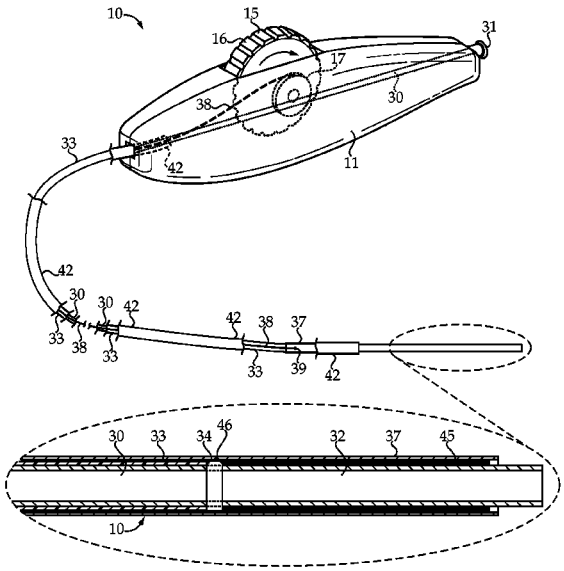
20 Claims, 4 Drawing Sheets