United States Patent [19]

Gombrich et al.

[11] **Patent Number: 4,814,759**

[45] **Date of Patent: Mar. 21, 1989**

[54] **FLAT PANEL DISPLAY MONITOR APPARATUS**

[75] Inventors: **Peter P. Gombrich**, Boulder; **Ernest E. Robbins**, Longmont, both of Colo.

[73] Assignee: **CliniCom Incorporated**, Boulder, Colo.

[21] Appl. No.: **70,942**

[22] Filed: **Jul. 8, 1987**

[51] **Int. Cl.**[4] **G09G 3/22**; G09G 3/28

[52] **U.S. Cl.** **340/771**

[58] **Field of Search** 340/700, 717, 752, 756, 340/758, 766, 768, 769, 771, 825.06, 825.29, 815.08, 815.09, 815.24; 364/413, 415, 704, 705, 708; 378/98; 323/911; 128/709, 710; 434/414, 419, 421; 40/493, 497, 508, 509, 530, 531, 533; 312/322; 248/274, 278, 279, 285, 286, 480

[56] **References Cited**

U.S. PATENT DOCUMENTS

2,825,152	10/1954	Baylon	434/421
2,915,944	12/1959	Butts	248/480
4,216,462	8/1980	McGrath et al.	364/415
4,356,475	10/1982	Neumann et al.	364/415
4,667,914	5/1987	Bailey	248/286
4,674,107	6/1987	Urban et al.	378/98
4,683,465	7/1987	Lake, Jr. et al.	340/700
4,687,166	8/1987	Poehler	248/279

Primary Examiner—Gerald L. Brigance
Assistant Examiner—Richard Hjerpe
Attorney, Agent, or Firm—Merchant, Gould, Smith, Edell, Welter & Schmidt

[57] **ABSTRACT**

A flat panel display monitor which may be secured to a wall includes structure for interacting with a data input device. The monitor further includes a housing and a flat video screen attached to the housing. A support assembly is included for supporting the screen relative to the housing in any one of at least three different positions with respect to the housing.
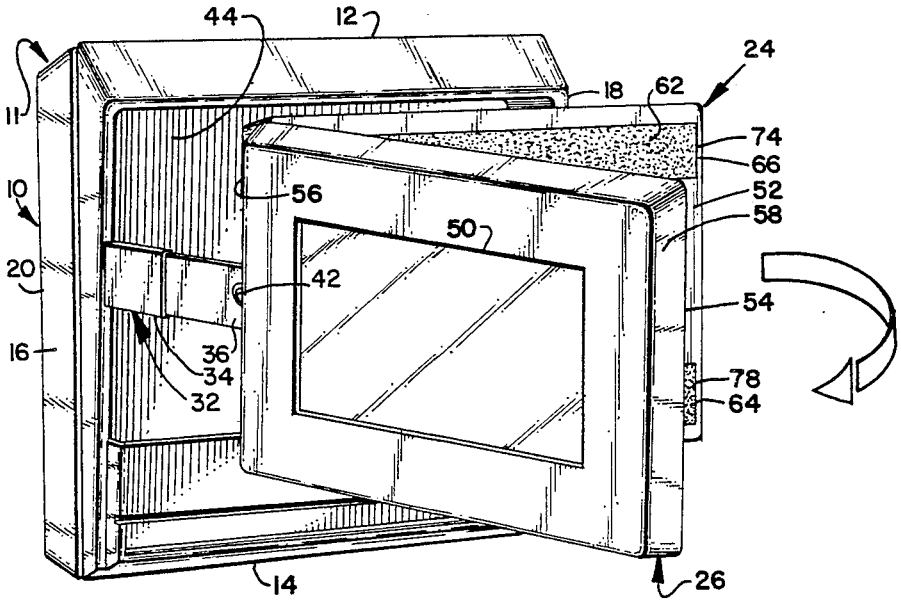
19 Claims, 6 Drawing Sheets