US00D811759S

(12) **United States Design Patent**
Woods

(10) **Patent No.: US D811,759 S**
(45) **Date of Patent: ** Mar. 6, 2018**

(54) **FURNITURE SPINE UNIT WITH BISTRO TABLE**

(71) Applicant: **Kimball International, Inc.**, Jasper, IN (US)

(72) Inventor: **Donald Woods**, Celestine, IN (US)

(73) Assignee: **Kimball International, Inc.**, Jasper, IN (US)

(**) Term: **15 Years**

(21) Appl. No.: **29/588,179**

(22) Filed: **Dec. 19, 2016**

(51) **LOC (11) Cl.** **06-01**

(52) **U.S. Cl.**
USPC **D6/342**

(58) **Field of Classification Search**
USPC D6/329, 332, 334, 335, 336, 338, 342, D6/374, 643, 641, 642, 686, 691.4, 702, D6/713, 714, 716, 716.1, 716.4, 698
CPC A47B 83/02; A47B 83/00; A47B 83/001; A47B 83/003; A47B 83/005; A47B 87/00; A47C 13/00; A47C 13/005; A47C 7/62; A47C 7/70; A47C 7/36; A47C 7/38; A47C 7/40
See application file for complete search history.

(56) **References Cited**

U.S. PATENT DOCUMENTS

D92,703	S		7/1934	Crego	
D225,818	S	*	1/1973	Torrey	D6/716.4
D264,027	S	*	4/1982	Aronowitz	D6/364
4,374,354	A		2/1983	Petrovic et al.	
D360,311	S	*	7/1995	Stamberg	D6/334
D430,763	S		9/2000	Scheffer	
D457,359	S		5/2002	Chan	
6,447,067	B1	*	9/2002	Williams	A47C 4/021 297/184.11
D476,819	S	*	7/2003	Williams	D6/334
6,824,220	B1		11/2004	Davison	
D526,803	S	*	8/2006	Lee	D6/381
7,347,493	B2		3/2008	Mulmed	
D566,980	S	*	4/2008	Mourgue	D6/381
D567,526	S	*	4/2008	Williams	D6/381
D589,283	S		3/2009	Stangdell	
D624,328	S		9/2010	Grandin et al.	
D639,083	S	*	6/2011	Martin	D6/381
D644,456	S	*	9/2011	Martin	D6/690
8,061,864	B2		11/2011	Metcalf et al.	
8,075,054	B2		12/2011	Smith	
D657,155	S		4/2012	Grandin et al.	
D661,112	S	*	6/2012	Grandin	D6/332
8,283,812	B2		10/2012	Azancot et al.	
D675,453	S		2/2013	Blet et al.	
D675,459	S	*	2/2013	Martin	D6/381
D677,477	S	*	3/2013	Agati	D6/336

(Continued)

FOREIGN PATENT DOCUMENTS

CN	202636171	1/2013
GB	2497773	6/2013
KR	20140120438	10/2014

Primary Examiner — Deanna L Pratt
(74) *Attorney, Agent, or Firm* — Faegre Baker Daniels LLP

(57) **CLAIM**

The ornamental design for a furniture spine unit with bistro table, as shown and described.

DESCRIPTION

FIG. **1** is a front perspective view of a furniture spine unit with bistro table of my new design;
FIG. **2** is a front view thereof;
FIG. **3** is a rear view thereof;
FIG. **4** is a side view thereof; and,
FIG. **5** is a top view thereof.
Features shown in broken lines form no part of the claimed design.
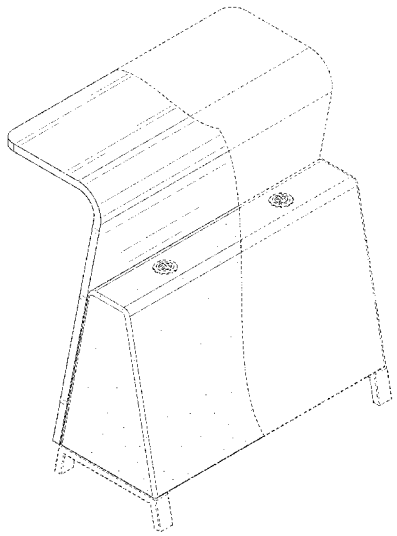
1 Claim, 5 Drawing Sheets