US009411359B2

(12) **United States Patent**
Min

(10) **Patent No.: US 9,411,359 B2**
(45) **Date of Patent: Aug. 9, 2016**

(54) **ACCELERATOR PEDAL APPARATUS FOR VEHICLE**

(71) Applicants: **Hyundai Motor Company**, Seoul (KR); **Kia Motors Corp.**, Seoul (KR)

(72) Inventor: **Jeong Seon Min**, Gwangju (KR)

(73) Assignees: **Hyundai Motor Company**, Seoul (KR); **Kia Motors Corp.**, Seoul (KR)

(*) Notice: Subject to any disclaimer, the term of this patent is extended or adjusted under 35 U.S.C. 154(b) by 303 days.

(21) Appl. No.: **14/097,166**

(22) Filed: **Dec. 4, 2013**

(65) **Prior Publication Data**

US 2015/0027265 A1 Jan. 29, 2015

(30) **Foreign Application Priority Data**

Jul. 23, 2013 (KR) 10-2013-0086543

(51) **Int. Cl.**
G05G 1/44 (2008.04)

(52) **U.S. Cl.**
CPC ***G05G 1/44*** (2013.01); *Y10T 74/20534* (2015.01)

(58) **Field of Classification Search**
CPC Y10T 74/20534; G05G 1/44; G05G 1/30; G05G 1/045; B60K 26/02
USPC 74/512, 513, 478; 123/399; 116/57
See application file for complete search history.

(56) **References Cited**

U.S. PATENT DOCUMENTS

3,926,275 A * 12/1975 Nersesian B60K 26/201 116/57
5,415,144 A * 5/1995 Hardin F02D 11/106 123/399
6,260,434 B1 * 7/2001 Holtorf G05G 1/30 74/478
8,635,930 B2 * 1/2014 Willemsen G05G 5/03 74/512
2009/0151502 A1 * 6/2009 Kim B60K 26/02 74/513
2009/0293666 A1 * 12/2009 Kim B60K 26/02 74/513
2010/0319480 A1 * 12/2010 Nebuya G05G 1/36 74/513
2012/0132028 A1 * 5/2012 Kim G05G 1/405 74/512
2013/0305874 A1 * 11/2013 Fuller G05G 1/44 74/513
2014/0338492 A1 * 11/2014 Yokoi G05G 1/30 74/513
2015/0059515 A1 * 3/2015 Min G05G 1/44 74/512

FOREIGN PATENT DOCUMENTS

JP 8-34261 A 2/1996
JP 2003-25863 A 1/2003
JP 2003-312304 A 11/2003
JP 2012-234375 A 11/2012
JP 2012-234376 * 11/2012 ..... G05G 1/44
KR 10-2009-0064192 A 6/2009
KR 100911560 B1 8/2009

OTHER PUBLICATIONS

EPO Machine Translation of JP 2012-234376, Mazda Motor Corp., Nov. 2012.*
Circular/Define Circular at Dictionary.com. Nov. 29, 2015.*

* cited by examiner

Primary Examiner — Vinh Luong
(74) *Attorney, Agent, or Firm* — Morgan, Lewis & Bockius LLP

(57) **ABSTRACT**

An apparatus may include a pedal pad located on a front lower side of a driver seat so as to be depressed by a driver, a first hinge pivotally coupling the pedal pad to a pedal bracket fixedly mounted to the front lower side of the driver seat, and a second hinge having an elastically-operated articulated structure and mounted to the pedal bracket in such a manner as to be connected to the pedal pad, the second hinge being spaced apart from the first hinge.
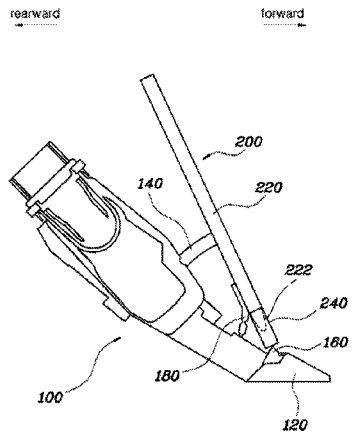
4 Claims, 7 Drawing Sheets