US009410559B2

(12) **United States Patent**
VanWalleghem et al.

(10) **Patent No.: US 9,410,559 B2**
(45) **Date of Patent: Aug. 9, 2016**

(54) **ENERGY-ACCUMULATION APPARATUS**

(71) Applicants: **Curtis VanWalleghem**, Toronto (CA); **Cameron Lewis**, Toronto (CA)

(72) Inventors: **Curtis VanWalleghem**, Toronto (CA); **Cameron Lewis**, Toronto (CA)

(73) Assignee: **Hydrostor, Inc.**, Canada

(*) Notice: Subject to any disclaimer, the term of this patent is extended or adjusted under 35 U.S.C. 154(b) by 0 days.

(21) Appl. No.: **14/167,198**

(22) Filed: **Jan. 29, 2014**

(65) **Prior Publication Data**

US 2015/0214815 A1 Jul. 30, 2015

(51) **Int. Cl.**

F15B 1/027	(2006.01)
F03D 9/02	(2006.01)
F04B 41/02	(2006.01)
F17B 1/26	(2006.01)
H02J 15/00	(2006.01)
F17C 1/00	(2006.01)

(52) **U.S. Cl.**

CPC ***F15B 1/027*** (2013.01); ***F03D 9/028*** (2013.01); ***F04B 41/02*** (2013.01); ***F17B 1/26*** (2013.01); ***F17C 1/007*** (2013.01); ***H02J 15/006*** (2013.01); *F05B 2260/42* (2013.01); *F17C 2201/0147* (2013.01); *F17C 2201/054* (2013.01); *F17C 2203/0617* (2013.01); *F17C 2203/0685* (2013.01); *F17C 2205/0126* (2013.01); *F17C 2205/0142* (2013.01); *F17C 2205/0184* (2013.01); *F17C 2221/031* (2013.01); *F17C 2223/0123* (2013.01); *F17C 2223/035* (2013.01); *F17C 2223/036* (2013.01); *F17C 2260/046* (2013.01); *F17C 2270/0581* (2013.01); *Y02E 10/725* (2013.01); *Y02E 60/15* (2013.01); *Y02E 60/17* (2013.01)

(58) **Field of Classification Search**

CPC Y02E 10/38; Y02E 10/32
USPC 290/42, 43, 53, 54; 417/330–333; 416/7, 85; 415/5, 495; 60/495–502
See application file for complete search history.

(56) **References Cited**

U.S. PATENT DOCUMENTS

4,422,799	A	12/1983	Green et al.	
5,513,886	A	5/1996	Cyr	
8,123,579	B2 *	2/2012	Gerber	441/1
2007/0231072	A1 *	10/2007	Jennings et al.	405/75
2008/0093852	A1 *	4/2008	Vowles et al.	290/42
2009/0284014	A1 *	11/2009	Sieber et al.	290/53
2010/0107627	A1 *	5/2010	Morgan	60/495
2010/0171312	A1 *	7/2010	Burns	290/53

(Continued)

FOREIGN PATENT DOCUMENTS

FR	2993016	1/2014
WO	2014170723	10/2014

OTHER PUBLICATIONS

PCT/IB2015/050582 International Search Report and Written Opinion, completed May 27, 2015.

Primary Examiner — Tulsidas C Patel
Assistant Examiner — Sean Gugger
(74) *Attorney, Agent, or Firm* — Tarolli, Sundheim, Covell & Tummino LLP

(57) **ABSTRACT**

An energy-accumulation apparatus includes a variable-buoyancy assembly configured to be selectively buoyant in a body of water. The energy-accumulation apparatus also includes a delivery assembly coupled to the variable-buoyancy assembly. The delivery assembly is configured to deliver the variable-buoyancy assembly within the body of water between a first position to a second position.
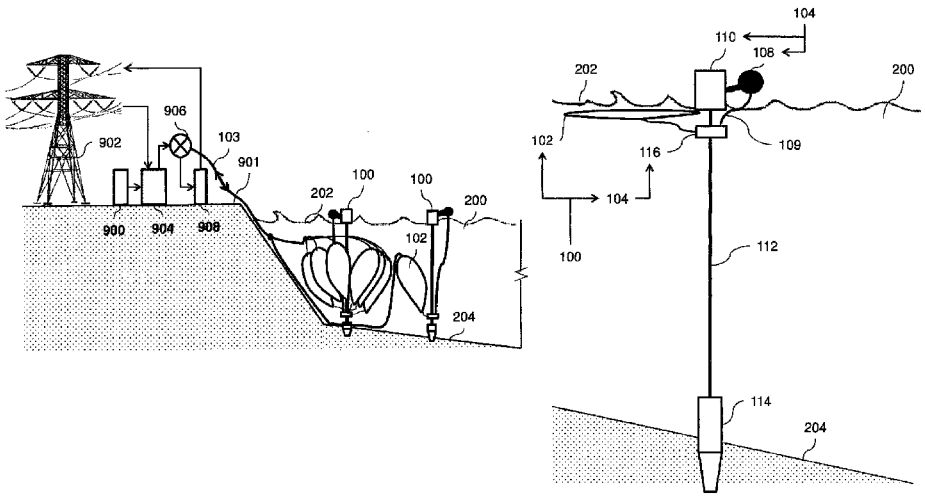
22 Claims, 10 Drawing Sheets