US007600459B2

(12) **United States Patent**
Bodey et al.

(10) **Patent No.: US 7,600,459 B2**
(45) **Date of Patent: Oct. 13, 2009**

(54) **DRIVE MECHANISM AND SLICING APPARATUS FOR FOOD SLICING MACHINE**

(75) Inventors: **Todd L. Bodey**, Springfield, OH (US); **Tony L. Thomas**, Worthington, OH (US); **David J. Petty**, Johnstown, OH (US)

(73) Assignee: **J. E. Grote Company, Inc.**, Columbus, OH (US)

(*) Notice: Subject to any disclaimer, the term of this patent is extended or adjusted under 35 U.S.C. 154(b) by 518 days.

(21) Appl. No.: **11/231,702**

(22) Filed: **Sep. 21, 2005**

(65) **Prior Publication Data**

US 2007/0062353 A1 Mar. 22, 2007

(51) **Int. Cl.**
B23D 53/00 (2006.01)
B23B 13/08 (2006.01)

(52) **U.S. Cl.** **83/788**; 30/380

(58) **Field of Classification Search** 83/788, 83/145, 437.1, 932, 703, 409.2, 704, 705, 83/409.1, 574, 816, 818, 102.1; 30/380
See application file for complete search history.

(56) **References Cited**

U.S. PATENT DOCUMENTS

659,088	A		10/1900	McKenzie
1,861,412	A		5/1932	Oliver
1,870,774	A		8/1932	Gaines
1,908,727	A		5/1933	Bleam
2,741,281	A		4/1956	Braun
3,669,163	A		6/1972	Crane
3,760,715	A		9/1973	Grote et al.
4,230,007	A		10/1980	Grote et al.
4,312,253	A		1/1982	Johnson et al.
4,318,322	A		3/1982	Russell
4,372,185	A		2/1983	Pila
4,436,012	A		3/1984	Hochanadel
4,502,184	A	*	3/1985	Karubian 452/160
4,592,261	A	*	6/1986	Miyaji et al. 83/102.1
4,953,295	A	*	9/1990	Barradas et al. 30/380
5,031,497	A		7/1991	Moshier et al.
5,235,885	A		8/1993	Camarena et al.
5,251,525	A	*	10/1993	Galloway 83/574
5,784,936	A		7/1998	King
5,906,297	A		5/1999	Cole
6,044,741	A		4/2000	Sapp et al.
6,132,629	A		10/2000	Boley

(Continued)

FOREIGN PATENT DOCUMENTS

CA 2346839 6/2004

(Continued)

Primary Examiner—Ghassem Alie
(74) *Attorney, Agent, or Firm*—Jason H. Foster; Kremblas, Foster, Phillips & Pollick

(57) **ABSTRACT**

A food slicing machine using a linear servo motor to reciprocate a carriage holding food products through a path that includes a slicing blade. The slicing apparatus is a modular apparatus that can be mounted to and removed from slicing machines as a unit without the need for disassembly of the components of the slicing apparatus. An adjustment mechanism for the blade guide uses two shafts that extend from a bearing plate into a finger that is mounted to the blade guide. The lower shaft has a cam nut that displaces the finger about the upper shaft to bend the blade guide. There is also an adjustment mechanism for the idler pulley of the band blade apparatus.
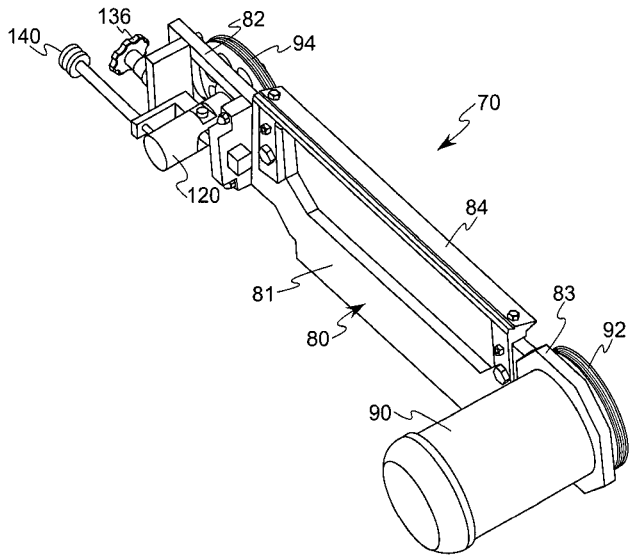
7 Claims, 11 Drawing Sheets