US008698558B2

(12) **United States Patent**
Mathe et al.

(10) **Patent No.: US 8,698,558 B2**
(45) **Date of Patent: Apr. 15, 2014**

(54) **LOW-VOLTAGE POWER-EFFICIENT ENVELOPE TRACKER**

(75) Inventors: **Lennart K Mathe**, San Diego, CA (US); **Thomas Domenick Marra**, San Diego, CA (US); **Todd R Sutton**, Del Mar, CA (US)

(73) Assignee: **QUALCOMM Incorporated**, San Diego, CA (US)

(*) Notice: Subject to any disclaimer, the term of this patent is extended or adjusted under 35 U.S.C. 154(b) by 38 days.

(21) Appl. No.: **13/167,659**

(22) Filed: **Jun. 23, 2011**

(65) **Prior Publication Data**

US 2012/0326783 A1 Dec. 27, 2012

(51) **Int. Cl.**
H03F 3/217 (2006.01)

(52) **U.S. Cl.**
USPC **330/251**; 330/136; 330/297

(58) **Field of Classification Search**
USPC ..... 330/10, 136, 207 A, 251, 297
See application file for complete search history.

(56) **References Cited**

U.S. PATENT DOCUMENTS

5,905,407	A *	5/1999	Midya	330/10
6,300,826	B1	10/2001	Mathe et al.	
6,661,217	B2	12/2003	Kimball et al.	
6,792,252	B2	9/2004	Kimball et al.	
6,838,931	B2 *	1/2005	Midya et al.	330/10
7,061,313	B2	6/2006	Kimball et al.	
7,068,984	B2	6/2006	Mathe et al.	
7,368,985	B2	5/2008	Kusunoki	
7,679,433	B1	3/2010	Li	
7,755,431	B2 *	7/2010	Sun	330/297
7,932,780	B2 *	4/2011	Elia	330/136
8,030,995	B2 *	10/2011	Okubo et al.	330/297
8,237,499	B2 *	8/2012	Chen et al.	330/136
2005/0046474	A1	3/2005	Matsumoto et al.	
2005/0215209	A1	9/2005	Tanabe et al.	
2008/0278136	A1	11/2008	Murtojarvi	
2010/0001793	A1	1/2010	Van Zeijl et al.	
2011/0095827	A1	4/2011	Tanaka et al.	
2012/0293253	A1 *	11/2012	Khlat et al.	330/127

OTHER PUBLICATIONS

Choi, et al., "Envelope Tracking Power Amplifier Robust to Battery Depletion," 2010 IEEE.
MTT-S International Microwave SYmposium Digest (MTT), May 2010.

(Continued)

Primary Examiner — Khanh V Nguyen
(74) *Attorney, Agent, or Firm* — William M. Hooks

(57) **ABSTRACT**

Techniques for efficiently generating a power supply are described. In one design, an apparatus includes an envelope amplifier and a boost converter. The boost converter generates a boosted supply voltage having a higher voltage than a first supply voltage (e.g., a battery voltage). The envelope amplifier generates a second supply voltage based on an envelope signal and the boosted supply voltage (and also possibly the first supply voltage). A power amplifier operates based on the second supply voltage. In another design, an apparatus includes a switcher, an envelope amplifier, and a power amplifier. The switcher receives a first supply voltage and provides a first supply current. The envelope amplifier provides a second supply current based on an envelope signal. The power amplifier receives a total supply current including the first and second supply currents. In one design, the switcher detects the second supply current and adds an offset to generate a larger first supply current than without the offset.
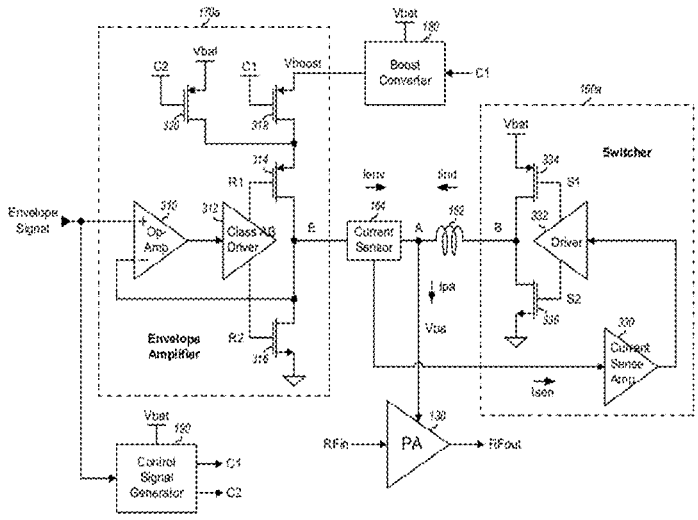
20 Claims, 6 Drawing Sheets