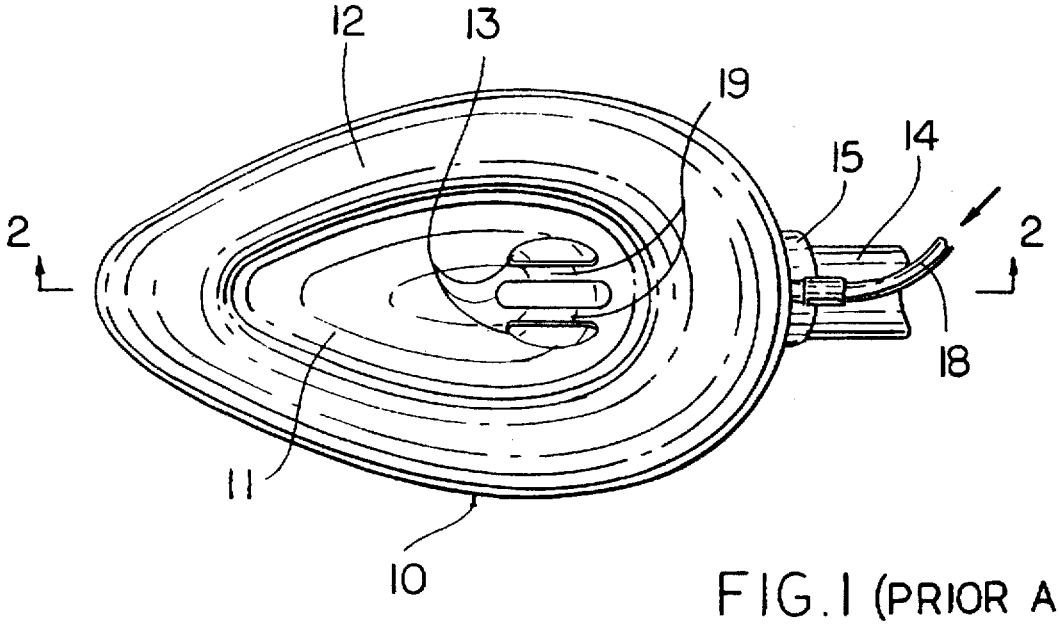

FIG. 1 (PRIOR ART)
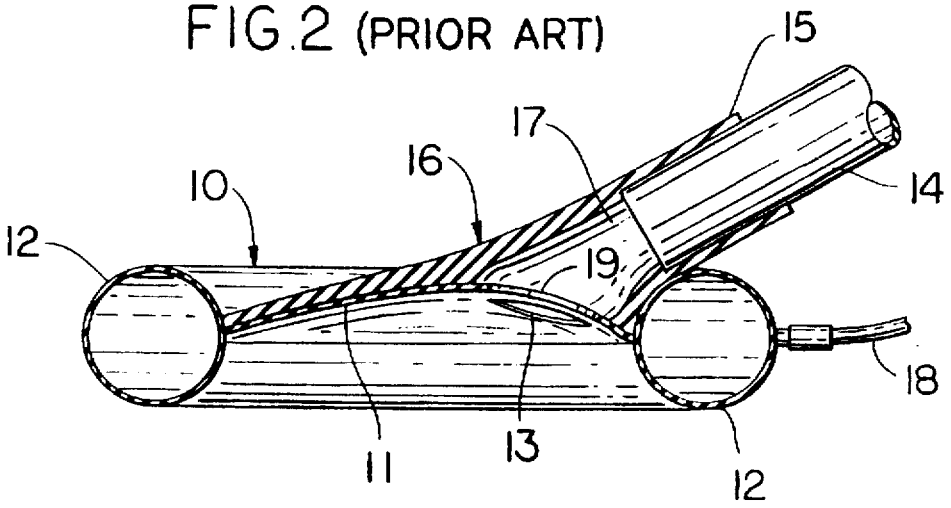
FIG. 2 (PRIOR ART)