APPARATUS FOR COLLECTING AND DISTRIBUTING ATMOSPHERIC PRECIPITATIONS

Filed Aug. 21, 1962 3 Sheets-Sheet 1

FIG. 1

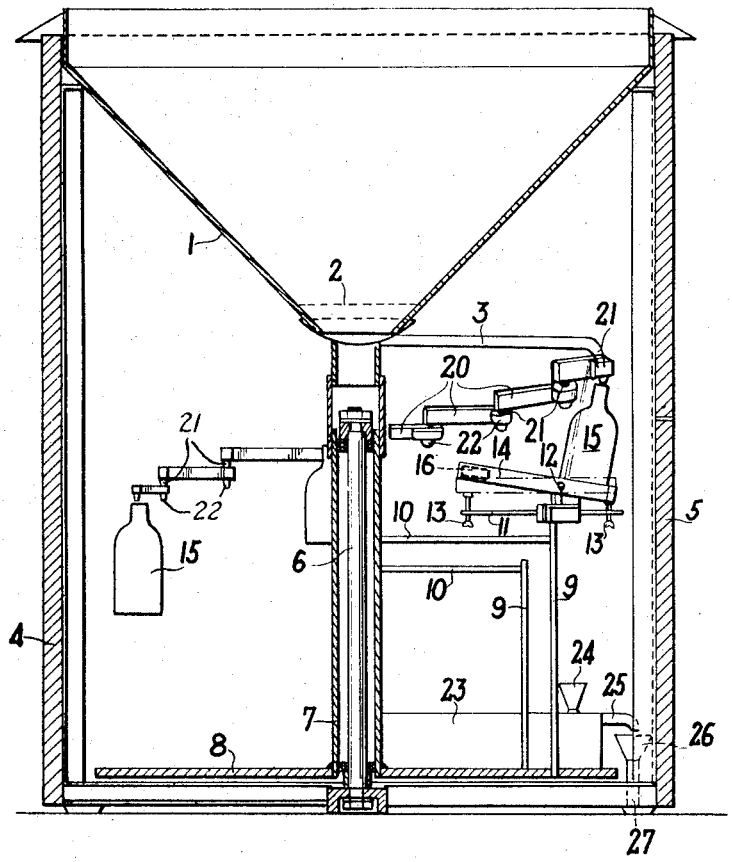

INVENTORS
ANDRÉ DOURY
CYR GRAVE
JEAN VERTUT

BY Bacon & Thomas ATTORNEYS