United States Patent [19]

Kelman

[11] **Patent Number: 4,591,358**

[45] **Date of Patent: May 27, 1986**

[54] **INTRAOCULAR LENS**

[76] Inventor: **Charles D. Kelman,** North Shore Towers, 269 Grand Central Pkwy., Floral Park, N.Y. 11005

[21] Appl. No.: **480,836**

[22] Filed: **Mar. 31, 1983**

[51] **Int. Cl.**[4] **A61F 2/16**

[52] **U.S. Cl.** **623/6**

[58] **Field of Search** 3/13; 623/6

[56] **References Cited**

U.S. PATENT DOCUMENTS

4,418,431 12/1983 Feaster 3/13

4,437,194 3/1984 Hahs 3/13

OTHER PUBLICATIONS

American IOL International Intraocular Lenses (advertisement) American IOL International, 15542 Graham St., Huntington Beach, CA 92647, "Style 115 Shepard Universal A/C IOL", Dec. 29, 1981.

Lens Styles from Cilco (brochure), Cilco, Cilco, Inc., 1616 13th Ave., Box 1680, Huntington, West Virginia 25717, Oct. 1982, Multiflex Anterior Chamber Lens & Symmetrical Multiflex Anterior Chamber Lens.

Primary Examiner—Ronald L. Frinks

Attorney, Agent, or Firm—Henry Sternberg; Bert J. Lewen

[57] **ABSTRACT**

An intraocular lens suitable for seating in the ciliary sulcus of the posterior chamber of a human eye utilizing flexible legs individually making substantially single contact points with the interior of the eye and individually comprising compression springs.
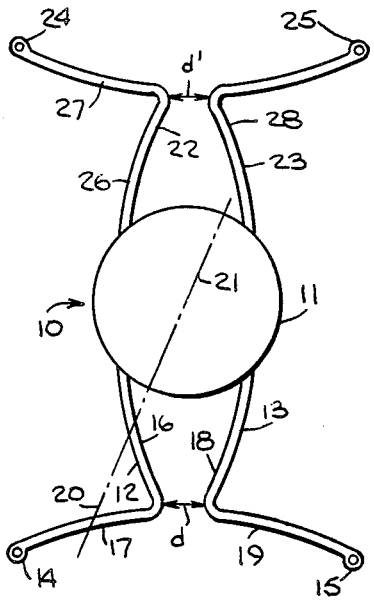
9 Claims, 2 Drawing Figures