HEAVY DUTY CASTER

Filed Sept. 16, 1964 2 Sheets-Sheet 1

Fig. 1

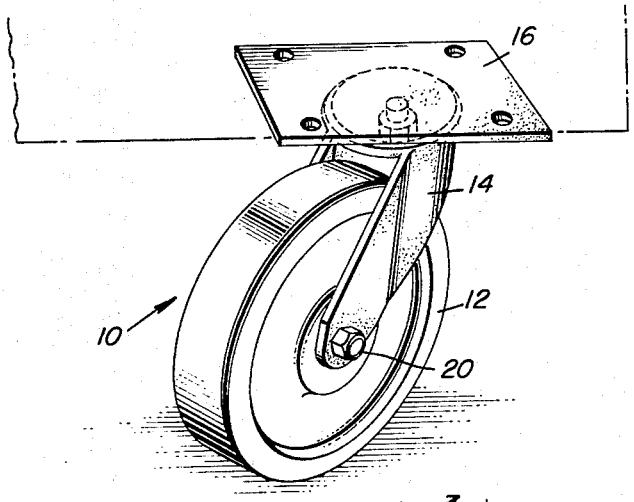

Fig. 2

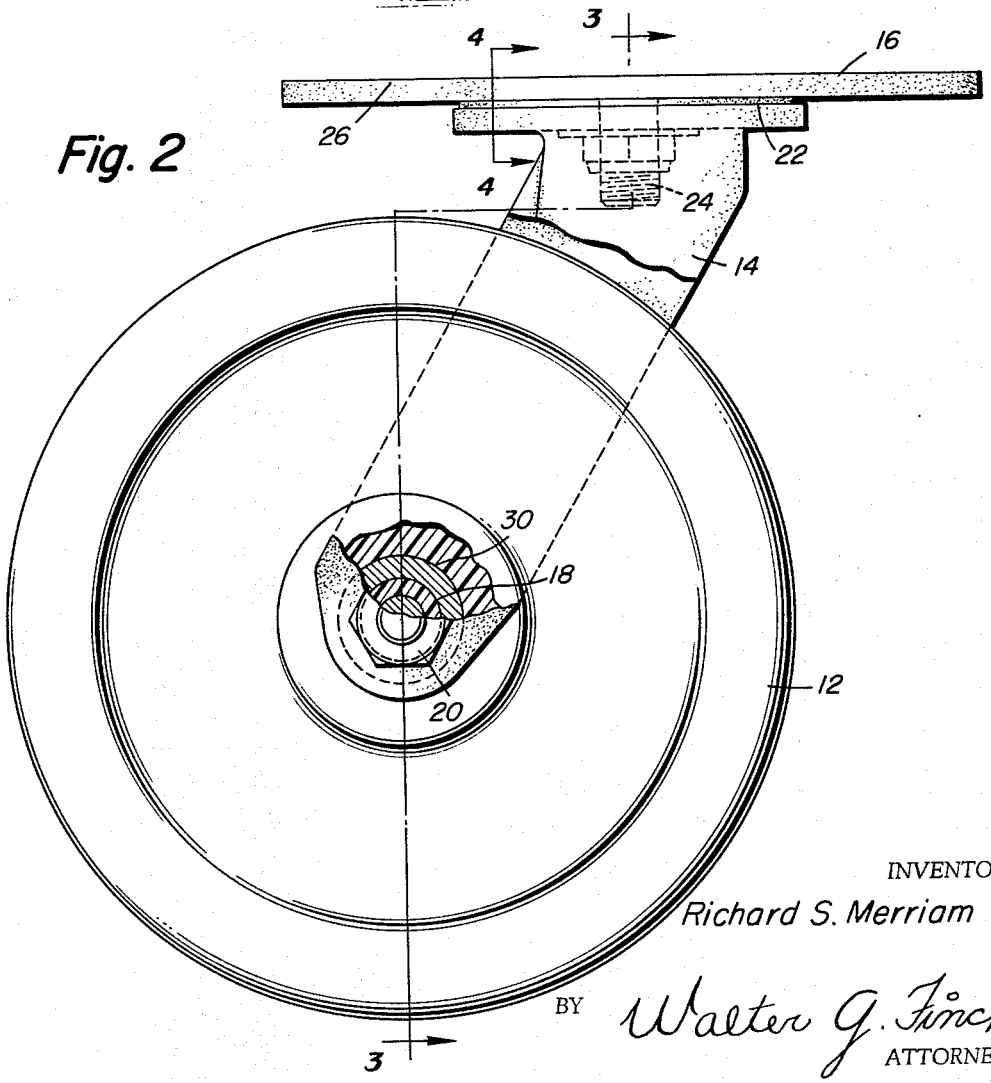

INVENTOR
Richard S. Merriam
BY Walter G. Finch
ATTORNEY