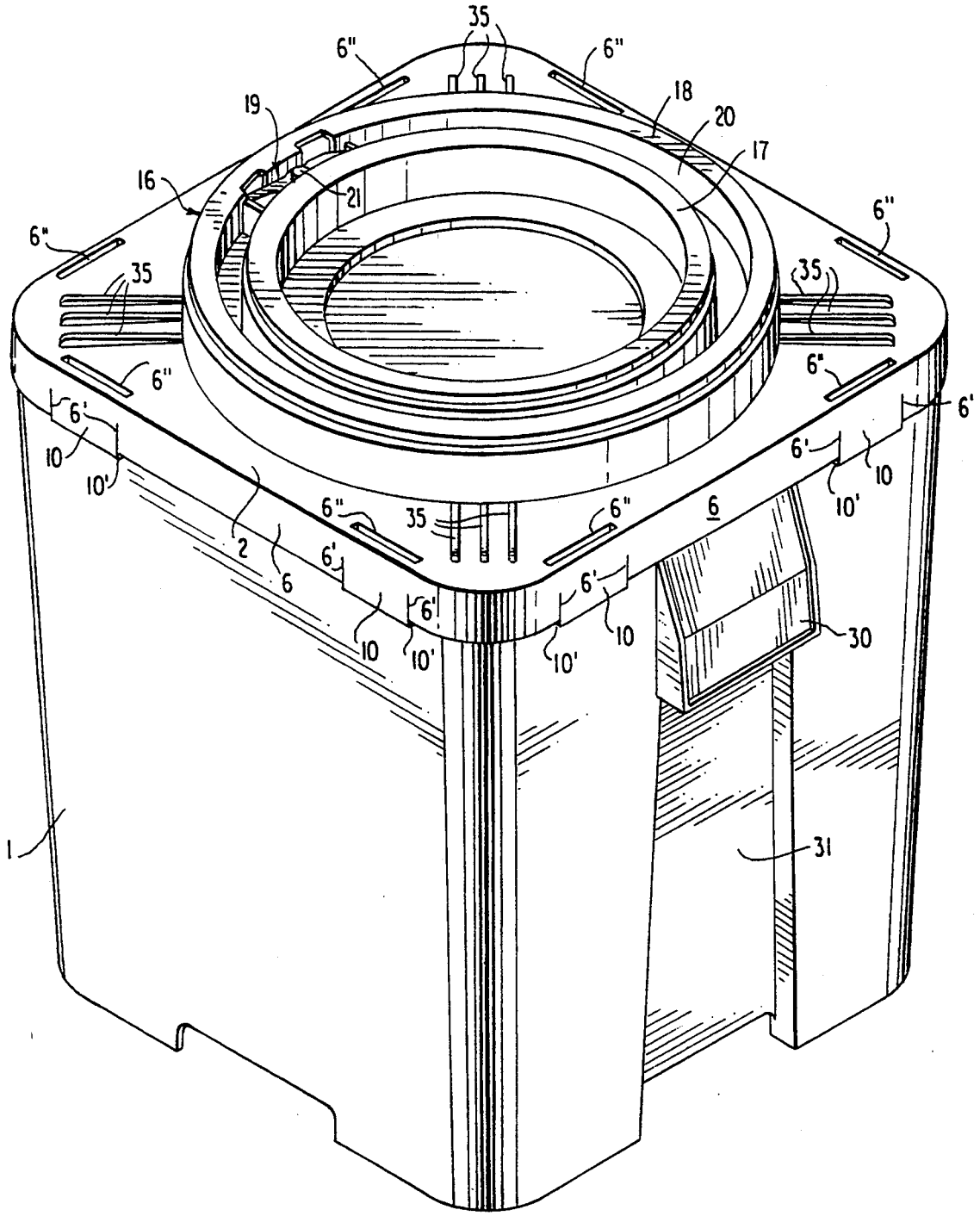
35
6"
6"
19
18
20
17
16
21
6"
6"
35
35
6"
6"
6'
6'
10
10'
6'
10
10'
6"
35
6"
6
2
6
6'
6'
6'
10
10'
10'
10
30
1
31

FIG. 1