US009370358B2

(12) **United States Patent**
Shelton, IV et al.

(10) **Patent No.: US 9,370,358 B2**
(45) **Date of Patent: *Jun. 21, 2016**

(54) **MOTOR-DRIVEN SURGICAL CUTTING AND FASTENING INSTRUMENT WITH TACTILE POSITION FEEDBACK**

(71) Applicant: **Ethicon Endo-Surgery, Inc.**, Cincinnati, OH (US)

(72) Inventors: **Frederick E. Shelton, IV**, Hillsboro, OH (US); **John N. Ouwerkerk**, Staunton, VA (US); **Jerome R. Morgan**, Cincinnati, OH (US); **Jeffrey S. Swayze**, Hamilton, OH (US)

(73) Assignee: **Ethicon Endo-Surgery, LLC**, Los Frailes Industrial Park, Guaynabo, PR (US)

(*) Notice: Subject to any disclaimer, the term of this patent is extended or adjusted under 35 U.S.C. 154(b) by 567 days.

This patent is subject to a terminal disclaimer.

(21) Appl. No.: **13/656,257**

(22) Filed: **Oct. 19, 2012**

(65) **Prior Publication Data**

US 2013/0126582 A1 May 23, 2013

Related U.S. Application Data

(63) Continuation of application No. 13/151,501, filed on Jun. 2, 2011, now Pat. No. 8,292,155, which is a continuation of application No. 11/344,024, filed on Jan. 31, 2006, now Pat. No. 8,186,555.

(51) **Int. Cl.**

A61B 17/072	(2006.01)
A61B 17/068	(2006.01)
A61B 17/00	(2006.01)

(52) **U.S. Cl.**
CPC ***A61B 17/068*** (2013.01); ***A61B 17/07207*** (2013.01); *A61B 2017/00398* (2013.01); *A61B 2017/00734* (2013.01)

(58) **Field of Classification Search**
CPC . A61B 17/068; A61B 17/072; A61B 17/1155
USPC 227/176.1, 178.1, 180.1, 19; 606/153, 606/219
See application file for complete search history.

(56) **References Cited**

U.S. PATENT DOCUMENTS

66,052	A	6/1867	Smith
662,587	A	11/1900	Blake

(Continued)

FOREIGN PATENT DOCUMENTS

AU	2008207624	A1	3/2009
AU	2010214687	A1	9/2010

(Continued)

OTHER PUBLICATIONS

European Search Report, Application No. 07250383.2, dated Jun. 19, 2007 (9 pages).

(Continued)

Primary Examiner — Nathaniel Chukwurah

(57) **ABSTRACT**

A surgical instrument is disclosed. The surgical instrument comprises a motor, an end effector, a drive shaft, and a closure trigger, wherein actuation of the closure trigger causes the end effector to clamp an object. The surgical instrument further comprises a firing trigger distinct from the closure trigger for actuating the motor, a run motor sensor capable of communicating with the motor and configured to sense actuation of the firing trigger, and a tactile feedback system for applying a feedback force to the firing trigger.
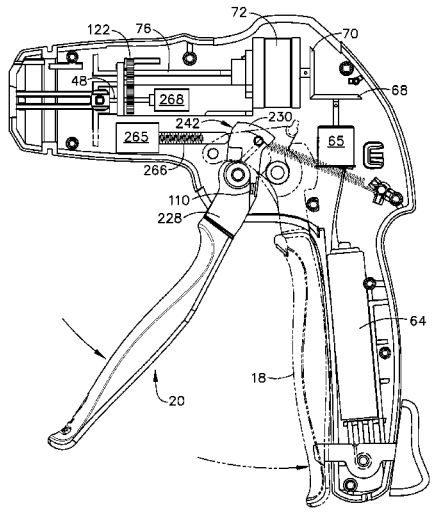
24 Claims, 39 Drawing Sheets