US008270158B2

(12) **United States Patent**
Matsuoka

(10) **Patent No.: US 8,270,158 B2**
(45) **Date of Patent: Sep. 18, 2012**

(54) **HOUSING CONSTRUCTION FOR MOBILE COMPUTING DEVICE**

(75) Inventor: **Yoshimichi Matsuoka**, Cupertino, CA (US)

(73) Assignee: **Hewlett-Packard Development Company, L.P.**, Houston, TX (US)

(*) Notice: Subject to any disclaimer, the term of this patent is extended or adjusted under 35 U.S.C. 154(b) by 1297 days.

(21) Appl. No.: **11/948,741**

(22) Filed: **Nov. 30, 2007**

(65) **Prior Publication Data**

US 2009/0059495 A1 Mar. 5, 2009

Related U.S. Application Data

(63) Continuation-in-part of application No. 11/848,184, filed on Aug. 30, 2007, now abandoned.

(51) **Int. Cl.**
G06F 1/16 (2006.01)

(52) **U.S. Cl.** **361/679.55**; 345/156; 455/575.3; 257/296

(58) **Field of Classification Search** 345/173, 345/169, 174, 4, 156, 32; 455/550, 564, 455/575.1, 575.3, 573; 178/18.03; 235/492, 235/493, 494; 439/160, 607.53, 83; 361/679.5, 361/679.48, 679.49, 679.55, 679.21, 679.22, 361/679.23, 679.02; 257/432, 98, 296, 324
See application file for complete search history.

(56) **References Cited**

U.S. PATENT DOCUMENTS

3,744,034 A 7/1973 Paul
4,559,705 A 12/1985 Hodge et al.
D288,746 S 3/1987 Allekotte
4,860,372 A 8/1989 Kuzumuki et al.
D306,176 S 2/1990 Yubisui et al.
4,916,441 A 4/1990 Gombrich
4,927,986 A 5/1990 Daly
4,972,496 A 11/1990 Sklarew
5,040,296 A 8/1991 Yerger
5,049,862 A 9/1991 Dao et al.
D326,446 S 5/1992 Wong
5,128,829 A 7/1992 Loew
5,165,415 A 11/1992 Wallace et al.
5,205,017 A 4/1993 Wang
5,205,107 A 4/1993 Herink
5,231,381 A 7/1993 Duwaer
5,253,142 A 10/1993 Wang
5,283,862 A 2/1994 Lund
5,305,394 A 4/1994 Tanaka
(Continued)

FOREIGN PATENT DOCUMENTS

JP 407248867 A 9/1995
(Continued)

OTHER PUBLICATIONS

International Search Report and Written Opinion of the International Searching Authority in International Application PCT/US2006/038790, European Patent Office, Oct. 24, 2007, 18 pgs.
(Continued)

Primary Examiner — Hung Duong

(57) **ABSTRACT**

A primary housing segment is provided for a computing device. The primary housing segment may be unitarily formed and shaped to provide (i) at least a majority of a plurality of perimeter surfaces, the perimeter surfaces including a pair of opposing lateral surfaces, a bottom surface, and a top surface; (ii) one or more frontal surface regions; and (iii) a rear surface to retain an integrated substrate module.
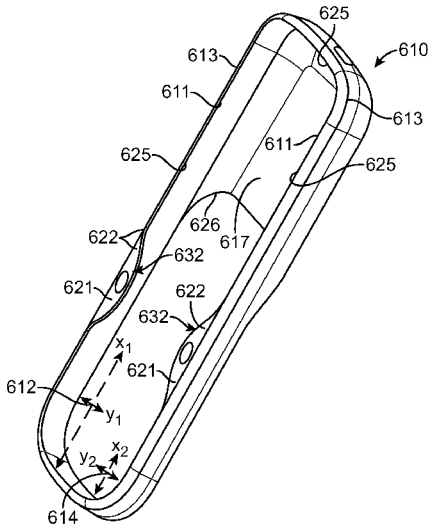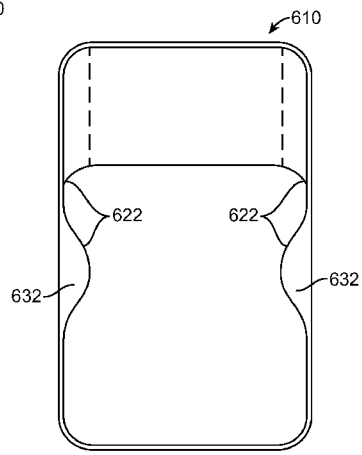
23 Claims, 8 Drawing Sheets