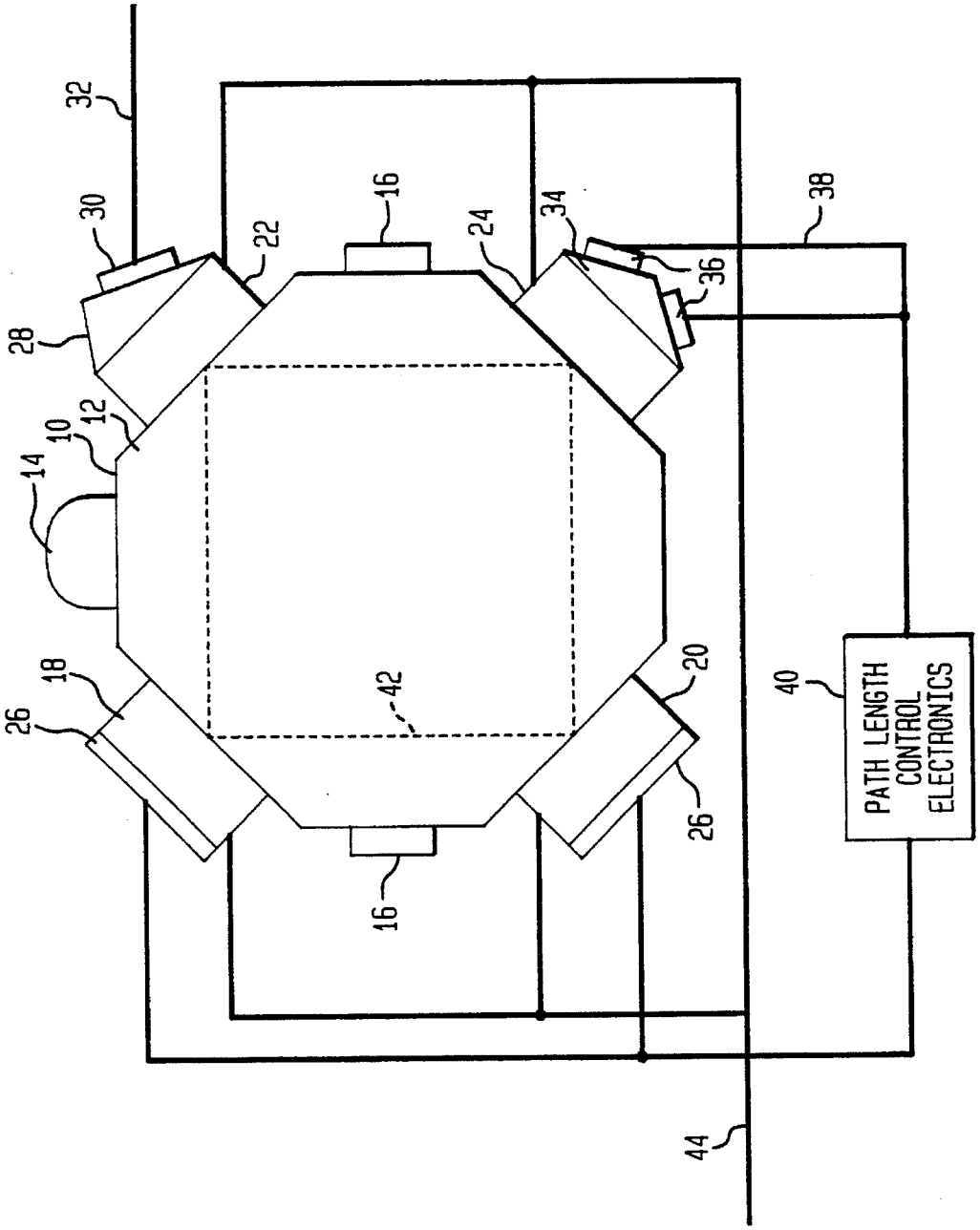
32
30
28
12
10
14
18
26
22
16
24
34
36
38
42
20
26
16
40
PATH LENGTH
CONTROL
ELECTRONICS
44

FIG. 1