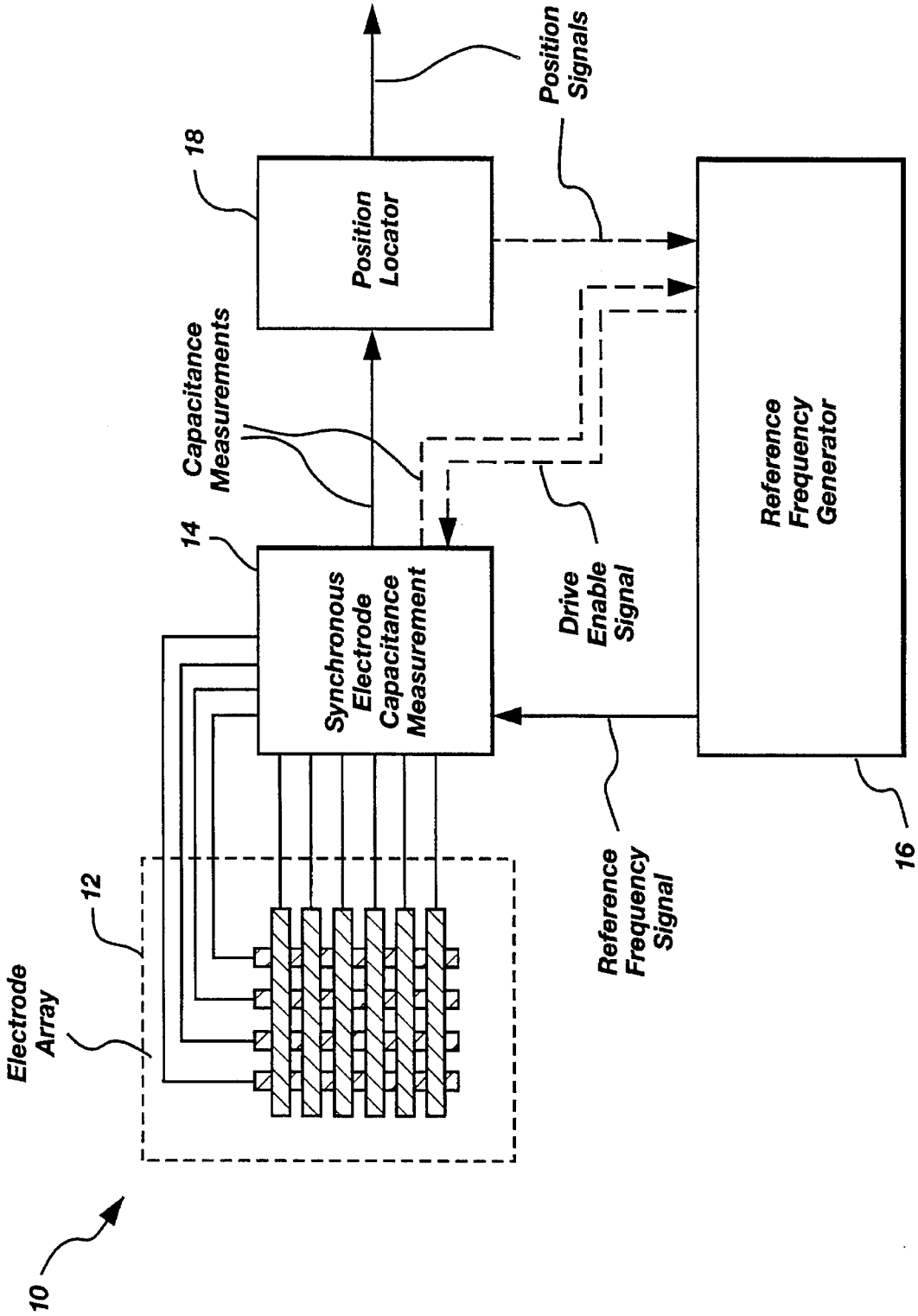
10
Electrode Array
12
14
Synchronous Electrode Capacitance Measurement
Capacitance Measurements
18
Position Locator
Position Signals
Drive Enable Signal
Reference Frequency Signal
Reference Frequency Generator
16

Fig. 1