Jan. 2, 1968 O. WICHTERLE 3,361,858

RESHAPING A XEROGEL BY MECHANICAL REMOVAL AND SWELLING TO FORM A HYDROGEL CONTACT LENS

Filed Jan. 7, 1965

Fig. 1

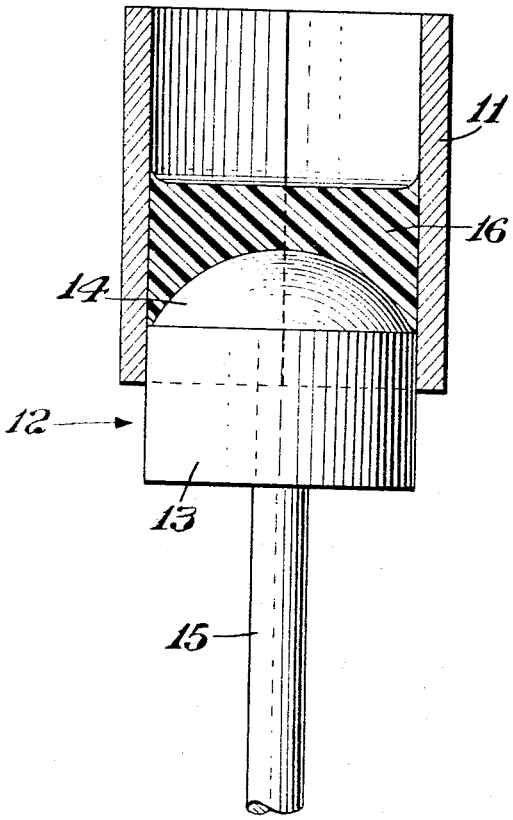

Fig. 2

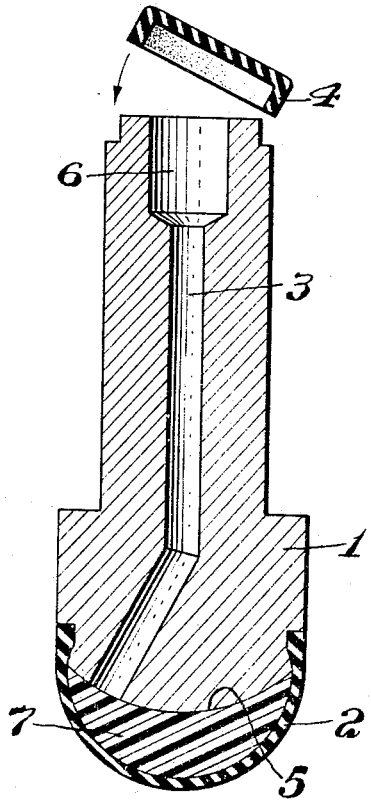

INVENTOR.
Otto Wichterle
BY Richard Good
Ag't