US006152958A

United States Patent [19]

Nordan

[11] **Patent Number: 6,152,958**

[45] **Date of Patent: Nov. 28, 2000**

[54] **FOLDABLE THIN INTRAOCULAR MEMBRANE**

[76] Inventor: **Lee T. Nordan**, 9834 Genesee Ave., Suite 209, La Jolla, Calif. 92037

[21] Appl. No.: **09/215,574**

[22] Filed: **Dec. 16, 1998**

[51] **Int. Cl.**[7] **A61F 2/16**

[52] **U.S. Cl.** **623/6.25**; 623/6.43

[58] **Field of Search** 623/6, 6.18–6.21, 623/6.25

[56] **References Cited**

U.S. PATENT DOCUMENTS

4,215,440	8/1980	Worst .	
4,370,760	2/1983	Kelman .	
4,704,122	11/1987	Portnoy	623/6
4,828,558	5/1989	Kelman .	
4,863,465	9/1989	Kelman .	
4,932,970	6/1990	Portney	623/6
4,950,288	8/1990	Kelman .	
5,071,432	12/1991	Baikoff .	
5,192,319	3/1993	Worst .	
5,300,117	4/1994	Baikoff et al. .	
5,476,515	12/1995	Kelman et al. .	
5,769,889	6/1998	Kelman .	
5,776,191	7/1998	Mazzocco	623/6

Primary Examiner—David H. Willse
Attorney, Agent, or Firm—Henri J. A. Charmasson; John D. Buchaca

[57] **ABSTRACT**

A thin foldable intraocular implant specifically configured for installation into the anterior chamber of a phakic or pseudophakic eye has broad positioning flaps that do not apply any substantial pressure against the wall of the eye. It can be rolled for insertion through a corneal incision as small as 2.75 millimeters. The implant is constituted by a resiliently flexible membrane, with an overall thickness as low as 10 microns, that vaults the iris without contacting it.
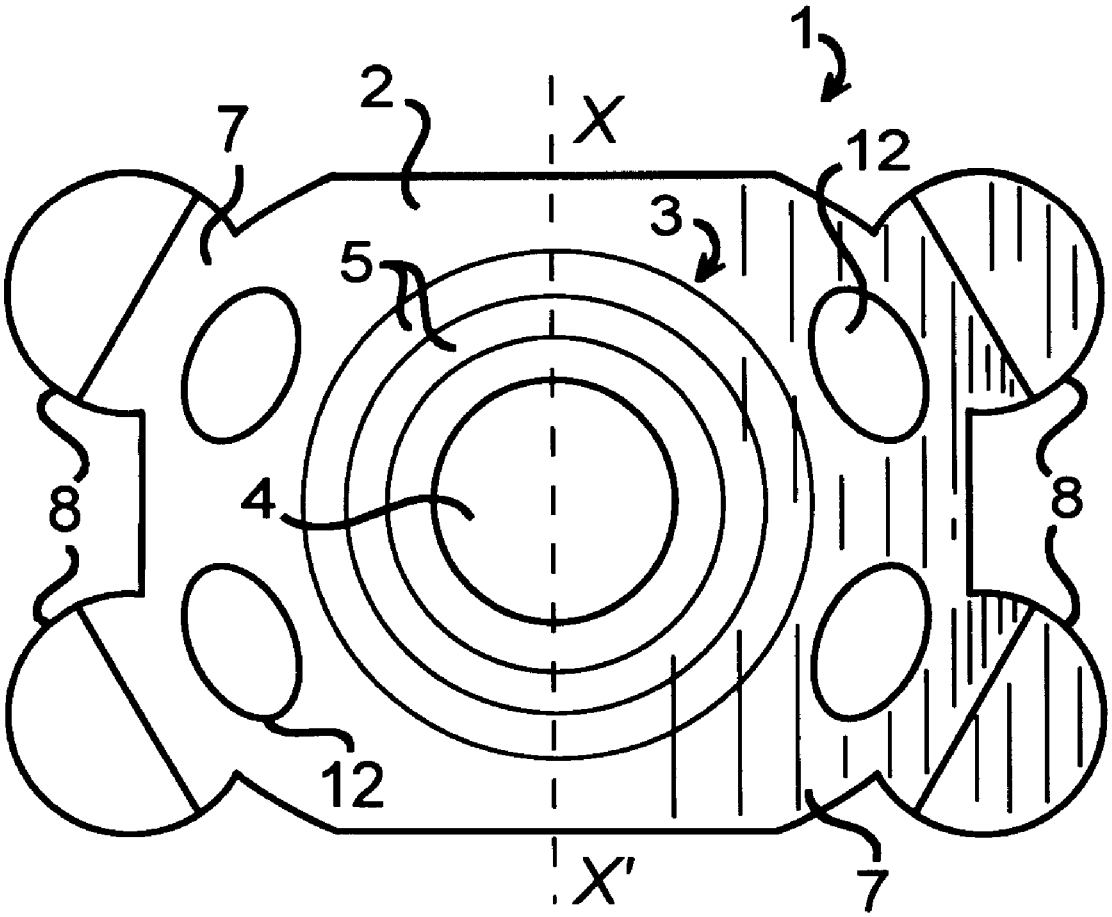
8 Claims, 2 Drawing Sheets