J. SOSS.

HINGE.

APPLICATION FILED APR. 15, 1912.

1,034,158. Patented July 30, 1912.

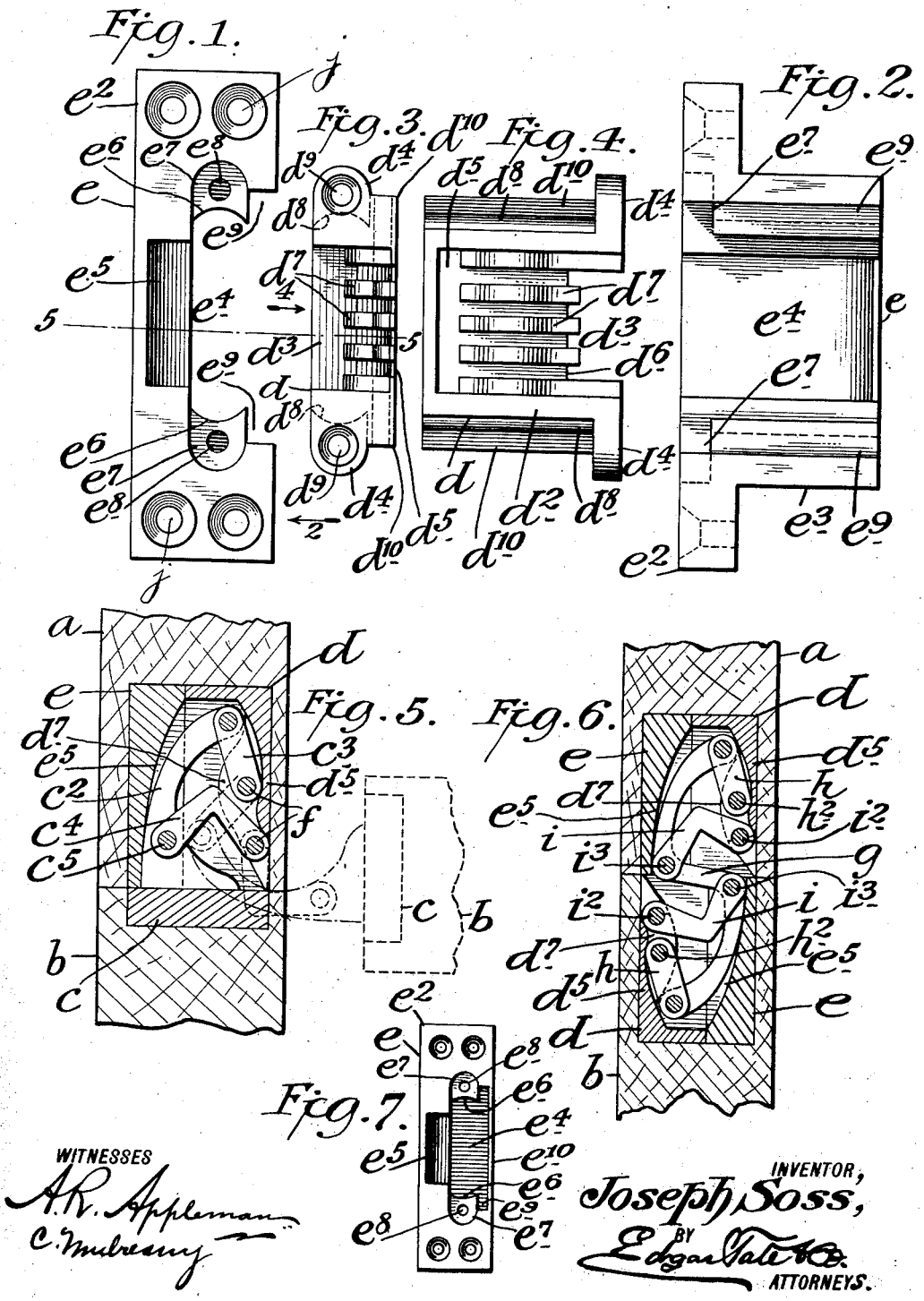

WITNESSES

A. R. Appleman

C. Mulreany

INVENTOR,

Joseph Soss,

BY Edgar Tate & Co.

ATTORNEYS.