United States Patent [19]

Fergason et al.

[11] **Patent Number: 4,832,458**

[45] **Date of Patent: May 23, 1989**

[54] **DISPLAY FOR CONTRAST ENHANCEMENT**

[75] Inventors: **James L. Fergason**, Atherton; **Robert Parker**, Alamo, both of Calif.

[73] Assignee: **Talig Corporation**, Sunnyvale, Calif.

[21] Appl. No.: **105,557**

[22] Filed: **Oct. 5, 1987**

Related U.S. Application Data

[60] Division of Ser. No. 53,583, May 18, 1987, Pat. No. 4,732,450, which is a continuation of Ser. No. 645,457, Aug. 28, 1984, abandoned.

[51] **Int. Cl.**[4] **G02F 1/13**

[52] **U.S. Cl.** ..... **350/338**; 350/331 R; 350/334; 350/345; 350/347 V

[58] **Field of Search** ..... 350/334, 338, 337, 276 SL, 350/347 V, 331 R

[56] **References Cited**

U.S. PATENT DOCUMENTS

992,151	5/1911	Berthon	354/102
1,128,979	2/1915	Hess	350/131
2,202,354	5/1940	De L. Saint Genies	252/171
3,161,509	12/1964	Howe et al.	350/132
3,457,400	7/1969	Appeldorn	362/311
3,576,364	4/1971	Zanomi	353/28
3,734,598	5/1973	Aiken	350/338
3,797,914	3/1974	Aiken	350/338
3,832,033	8/1974	Furuhata et al.	350/160
3,838,909	10/1974	Fitzgibbons	350/10
3,840,695	10/1974	Fischer	358/61
3,863,246	1/1975	Trcka	340/324
3,947,091	3/1976	Trcka	350/345
3,947,375	3/1976	Gray et al.	252/299
3,951,520	4/1976	Waring, Jr.	350/160
4,009,934	3/1977	Goodwin et al.	350/160
4,021,945	5/1977	Sussman	40/28
4,043,638	8/1977	Kaufmann	350/160
4,074,253	2/1978	Nadir	340/324
4,090,217	5/1978	Ernstoff et al.	350/331 R
4,150,876	4/1979	Yevick	350/338
4,190,330	2/1980	Berreman	350/331
4,264,147	4/1981	Baur et al.	350/345
4,298,249	11/1981	Gloor et al.	350/338
4,300,818	11/1981	Schachar	351/7
4,310,219	1/1982	Jaccard	350/321
4,330,813	5/1982	Deutsch	362/244
4,349,817	9/1982	Hoffman et al.	340/784
4,365,869	12/1982	Hareng et al.	350/345
4,411,495	10/1983	Beni et al.	350/347
4,435,047	3/1984	Fergason	350/334
4,556,289	12/1985	Fergason	350/350
4,579,423	4/1986	Fergason	350/334
4,591,233	5/1986	Fergason	350/334
4,596,445	6/1986	Fergason	350/339
4,602,945	8/1986	Fergason	350/331
4,605,284	8/1986	Fergason	350/334
4,606,611	8/1986	Fergason	350/334
4,613,207	9/1986	Fergason	350/331
4,616,903	10/1986	Fergason	350/334
4,662,720	5/1987	Fergason	350/339
4,693,557	9/1987	Fergason	350/331

FOREIGN PATENT DOCUMENTS

2358415	6/1974	Fed. Rep. of Germany	350/338
0102717	8/1980	Japan	350/334
57-157215	9/1982	Japan .	
0001016	3/1983	PCT Int'l Appl.	350/334
1442360	7/1976	United Kingdom .	
1540878	2/1979	United Kingdom .	

OTHER PUBLICATIONS

Werner E. L. Haas, *Scattering Electro Optic Cells,* Xerox Disclosure Journal, vol. 3, No. 5, Sep./Oct. 1978.

H. G. Craighead, Julian Cheng and S. Hackwood, *New Display Based on Electrically Induced Index Matching in an Inhomogeneous Medium,* Appl. Phys. Lett. 40(1), Jan. 1, 1982.

Primary Examiner—Stanley D. Miller
Assistant Examiner—N. Thantu
Attorney, Agent, or Firm—Flehr, Hohbach, Test, Albritton & Herbert

[57] **ABSTRACT**

A display comprising optical means for presenting an absence of light over a controlled viewing angle and means for selectively scattering or transmitting light in response to a prescribed input to effect a display of information within said viewing angle.
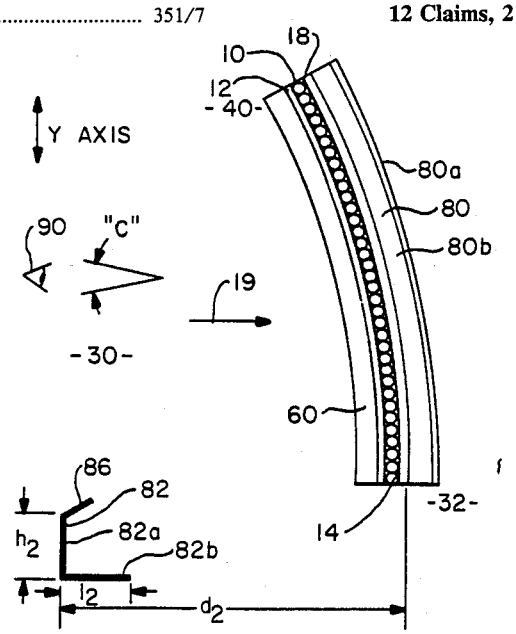
12 Claims, 2 Drawing Sheets