US005225858A

United States Patent [19]

Portney

[11] Patent Number: 5,225,858

[45] Date of Patent: Jul. 6, 1993

[54] MULTIFOCAL OPHTHALMIC LENS

[76] Inventor: Valdemar Portney, 7 Alassio, Irvine, Calif. 92720

[21] Appl. No.: 717,336

[22] Filed: Jun. 18, 1991

Related U.S. Application Data

[60] Continuation-in-part of Ser. No. 465,477, Jan. 16, 1990, Pat. No. 5,166,712, which is a division of Ser. No. 366,319, Jun. 14, 1989, Pat. No. 4,898,461, which is a continuation of Ser. No. 56,050, Jun. 1, 1987, abandoned.

[51] Int. Cl.[5] G02C 7/04; A61F 2/14; A61F 2/16

[52] U.S. Cl. 351/161; 623/5; 623/6

[58] Field of Search ..... 351/160 R, 160 H, 161, 351/162; 623/6, 5

[56] **References Cited**

U.S. PATENT DOCUMENTS

Re. 25,286	11/1962	DeCarle	351/161
1,483,509	2/1924	Bugbee	351/168
2,129,305	9/1938	Feinbloom	351/160 R
2,274,142	2/1942	Houchin	351/168
2,405,989	8/1946	Beach	351/169
2,511,517	6/1950	Spiegel	351/169
3,004,470	10/1961	Ruhle	351/168
3,031,927	5/1962	Wesley	351/161
3,034,403	5/1962	Neefe	351/162
3,210,894	10/1965	Bentley	51/284 R
3,227,507	1/1966	Feinbloom	351/160 R
3,339,997	9/1967	Wesley	351/161
3,420,006	7/1969	Barnett	351/129
3,431,327	3/1969	Tsuetaki	351/161
3,482,906	12/1969	Volk	351/160 R
3,542,461	11/1970	Girard et al.	351/160 H
3,693,301	9/1972	Lemaltre	51/284 R
3,794,414	2/1974	Wesley	351/161
3,932,148	1/1976	Krewalk, Sr.	51/284 R
4,055,378	10/1977	Feneberg et al.	351/160 H
4,062,629	12/1977	Winthrop	351/169
4,073,579	2/1978	Deeg et al.	351/169
4,162,122	7/1979	Cohen	351/161
4,195,919	4/1980	Shelton	351/160 R
4,199,231	4/1980	Evans	351/160 H
4,210,391	7/1980	Cohen	351/161
4,240,719	12/1980	Guilino et al.	351/169
4,274,717	6/1981	Davenport	351/169
4,307,945	12/1981	Kitchen et al.	351/169
4,315,673	2/1982	Guilino et al.	351/169
4,338,005	7/1982	Cohen	351/161
4,340,283	7/1982	Cohen	351/161
4,377,329	3/1983	Poler	351/160 R
4,402,579	9/1983	Poler	351/160 R
4,418,991	12/1983	Breger	351/161
4,504,982	3/1985	Burk	623/6

(List continued on next page.)

FOREIGN PATENT DOCUMENTS

32257/89	10/1989	Australia .
159395	12/1914	Canada .
0140063	5/1985	European Pat. Off. .
0351471	1/1990	European Pat. Off. .
2702117	7/1978	Fed. Rep. of Germany .

(List continued on next page.)

OTHER PUBLICATIONS

Mandell, R. B.; Contact Lens Practice; Charles C. Thomas, Publisher; Springfield, Ill.; pp. 385, 211–212, 403–404, 491–492, 792, 819.

Encyclopedia of Contact Lens Practice; Chapter 23; Sep. 1, 1960; pp. 24–26.

(List continued on next page.)

Primary Examiner—Scott J. Sugarman

Attorney, Agent, or Firm—Gordon L. Peterson

[57] **ABSTRACT**

A multifocal ophthalmic lens adapted for implantation in the eye or to be disposed on or in the cornea. The lens has an optical axis, a central zone and a plurality of annular zones circumscribing the central zone. Two of the annular zones have a first region with a far vision correction power and a second region with a near vision correction power. In an IOL embodiment, the vision correction power between far and near is progressive, and each of the second regions has a major segment in which the near vision correction power is substantially constant. The power in the central zone varies.
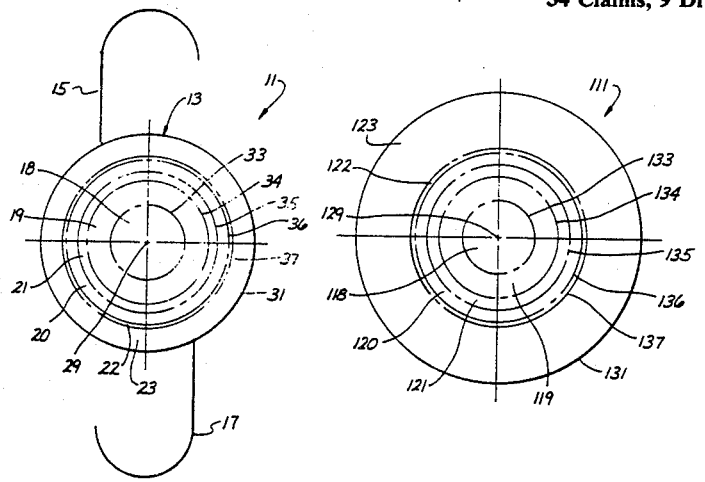
34 Claims, 9 Drawing Sheets