US009409458B2

(12) **United States Patent**
Johnson

(10) **Patent No.: US 9,409,458 B2**
(45) **Date of Patent: Aug. 9, 2016**

(54) **VEHICLE WITH SUSPENSION SYSTEM**

(71) Applicant: **William C. Johnson**, Leawood, KS (US)

(72) Inventor: **William C. Johnson**, Leawood, KS (US)

(*) Notice: Subject to any disclaimer, the term of this patent is extended or adjusted under 35 U.S.C. 154(b) by 0 days.

(21) Appl. No.: **14/543,172**

(22) Filed: **Nov. 17, 2014**

(65) **Prior Publication Data**

US 2015/0084301 A1 Mar. 26, 2015

(51) **Int. Cl.**
B60G 5/02 (2006.01)

(52) **U.S. Cl.**
CPC ***B60G 5/025*** (2013.01); ***B60G 5/02*** (2013.01); *B60G 2300/09* (2013.01)

(58) **Field of Classification Search**
CPC B60G 5/02; B60G 5/025; B60G 2300/09; B60K 7/0015; E02F 3/3414
See application file for complete search history.

(56) **References Cited**

U.S. PATENT DOCUMENTS

1,802,256 A * 4/1931 Hutt B60G 5/02 180/22
1,887,042 A * 11/1932 Rogers B60G 5/02 180/11
1,912,498 A * 6/1933 Rayburn B60G 5/02 180/22
2,103,381 A * 12/1937 Perkins B60G 5/02 267/291
2,134,233 A * 10/1938 McKone B60G 5/02 280/677
2,316,374 A * 4/1943 Townsend B60G 5/02 280/677
2,444,692 A * 7/1948 Beyerstedt E02F 3/3414 414/706
3,414,072 A * 12/1968 Hodges, Jr. B62D 5/09 180/14.1
3,525,534 A 8/1970 Madler et al.
3,743,044 A * 7/1973 Scheele B60G 5/02 180/22
3,917,306 A * 11/1975 Madler B60G 11/08 280/104
4,034,997 A * 7/1977 Oosterling B60G 5/02 180/308
4,116,298 A 9/1978 Hyler
4,152,000 A * 5/1979 Meisel, Jr. B60G 17/005 188/272
4,602,800 A 7/1986 Persson
4,768,601 A * 9/1988 Okano B60G 5/02 180/235
4,789,181 A * 12/1988 Baxter B60G 5/02 280/681
4,872,700 A * 10/1989 Mellgren B62D 49/08 280/677
5,339,611 A * 8/1994 Roderfeld B60G 5/00 180/209
5,538,264 A 7/1996 Brown et al.
6,056,304 A 5/2000 Brambilla
6,322,090 B1 11/2001 Chignoli et al.
6,584,710 B1 * 7/2003 Lin B60G 3/145 172/2
6,834,736 B2 12/2004 Kramer et al.
7,000,724 B2 * 2/2006 Lamela B60G 5/02 180/24.05
7,510,198 B2 3/2009 Rach et al.
7,753,179 B2 7/2010 Robertson
8,262,101 B2 * 9/2012 Madler B60G 21/023 180/24.11
8,297,634 B2 10/2012 Bittner

FOREIGN PATENT DOCUMENTS

FI WO 2012123630 A1 * 9/2012 ..... B60G 5/02

* cited by examiner

Primary Examiner — Laura Freedman
(74) *Attorney, Agent, or Firm* — Spencer Fane LLP

(57) **ABSTRACT**
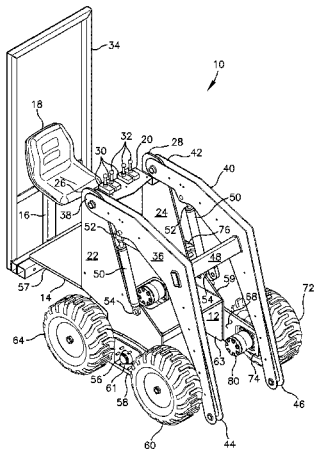
A vehicle includes two wheels on each side, with the pair of wheels on the left side mounted on a single bar that pivots up and down about a pivot point (left side wheel pivot plate) fastened to an axle that runs through the vehicle chassis from side-to-side. A pair wheels on the right side is similarly mounted (right side wheel pivot plate) on the right end of the axle. A stabilizer bar and associated components are attached