US009409358B2

(12) **United States Patent**
Bremmer et al.

(10) **Patent No.: US 9,409,358 B2**
(45) **Date of Patent: Aug. 9, 2016**

(54) **COMPOSITE STRUCTURE CORE CRUSH PREVENTION**

(71) Applicants: **Jonathan Bremmer**, Glastonbury, CT (US); **Darryl Mark Toni**, Madison, CT (US); **Jeffrey G. Sauer**, Woodbury, CT (US); **Edward Joseph Fabian**, Oxford, CT (US); **Paul H. Denavit**, Woodbridge, CT (US); **William E. Hovan, III**, Oxford, CT (US); **Gregory A. Davidson**, North Haven, CT (US)

(72) Inventors: **Jonathan Bremmer**, Glastonbury, CT (US); **Darryl Mark Toni**, Madison, CT (US); **Jeffrey G. Sauer**, Woodbury, CT (US); **Edward Joseph Fabian**, Oxford, CT (US); **Paul H. Denavit**, Woodbridge, CT (US); **William E. Hovan, III**, Oxford, CT (US); **Gregory A. Davidson**, North Haven, CT (US)

(73) Assignee: **SIKORSKY AIRCRAFT CORPORATION**, Stratford, CT (US)

(*) Notice: Subject to any disclaimer, the term of this patent is extended or adjusted under 35 U.S.C. 154(b) by 734 days.

(21) Appl. No.: **13/651,914**

(22) Filed: **Oct. 15, 2012**

(65) **Prior Publication Data**

US 2014/0106116 A1 Apr. 17, 2014

(51) **Int. Cl.**

B29D 24/00	(2006.01)
E04C 2/36	(2006.01)
B29D 99/00	(2010.01)

(52) **U.S. Cl.**

CPC ***B29D 24/005*** (2013.01); ***B29D 99/0021*** (2013.01); ***E04C 2/365*** (2013.01); *Y10T 156/10* (2015.01); *Y10T 428/24157* (2015.01)

(58) **Field of Classification Search**

None

See application file for complete search history.

(56) **References Cited**

U.S. PATENT DOCUMENTS

3,549,468	A	12/1970	Messineo et al.	
4,593,449	A	6/1986	Meray-Hovarth et al.	
5,518,796	A *	5/1996	Tsotsis	428/116
5,876,831	A *	3/1999	Rawal	428/117
6,635,202	B1 *	10/2003	Bugg et al.	428/318.4
6,953,001	B2	10/2005	Fanucci et al.	
8,128,028	B2	3/2012	Grillos	

FOREIGN PATENT DOCUMENTS

WO	9414600 A1	7/1994
WO	9508473 A1	3/1995

OTHER PUBLICATIONS

European Search Report for application EP 13180429.6, mailed Jan. 23, 2014, 7 pages.

* cited by examiner

Primary Examiner — David Sample
Assistant Examiner — Nicholas W Jordan
(74) *Attorney, Agent, or Firm* — Cantor Colburn LLP

(57) **ABSTRACT**

A composite structure includes a first laminate and a second laminate. At least one core assembly is located between the first laminate and the second laminate. The at least one core assembly includes a core component and a layer of filler material disposed at a first face of the core component. The layer of filler material at least partially fills selected cells of the core component to a fill depth such that the filler material rigidizes when cured to prevent movement and/or crushing of core component under a pressure applied during a cure cycle of the composite structure.
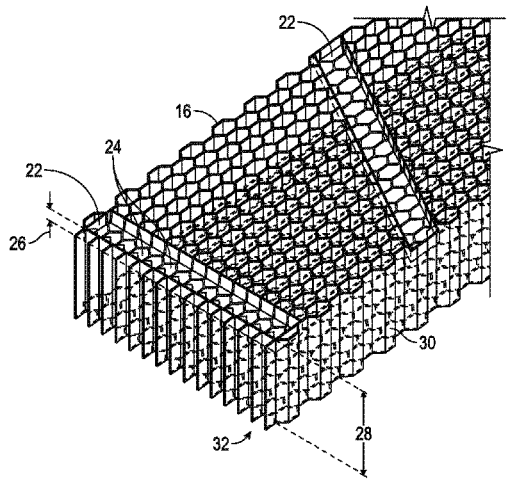
9 Claims, 2 Drawing Sheets