US006682857B2

(12) **United States Patent**
Takezawa et al.

(10) **Patent No.: US 6,682,857 B2**
(45) **Date of Patent: Jan. 27, 2004**

(54) **ELECTROLYTE FOR NON-AQUEOUS BATTERIES AND SECONDARY BATTERY USING THE SAME**

(75) Inventors: **Hideharu Takezawa**, Katano (JP); **Shoichiro Watanabe**, Nara (JP); **Shusaku Goto**, Moriguchi (JP); **Kunio Tsuruta**, Ikoma (JP)

(73) Assignee: **Matsushita Electric Industrial Co., Ltd.**, Osaka (JP)

(*) Notice: Subject to any disclaimer, the term of this patent is extended or adjusted under 35 U.S.C. 154(b) by 260 days.

(21) Appl. No.: **09/984,159**

(22) Filed: **Oct. 29, 2001**

(65) **Prior Publication Data**

US 2002/0081497 A1 Jun. 27, 2002

(30) **Foreign Application Priority Data**

Nov. 1, 2000 (JP) 2000-335092

(51) **Int. Cl.**[7] **H01M 6/14**; H01M 6/24

(52) **U.S. Cl.** **429/345**; 429/199; 429/341; 429/332

(58) **Field of Search** 429/203, 188, 429/341, 344, 345, 199, 332; 252/62.2, 500

(56) **References Cited**

U.S. PATENT DOCUMENTS

5,830,600 A	*	11/1998	Narang et al.	429/199
2003/0003358 A1	*	1/2003	Mandal et al.	429/188

FOREIGN PATENT DOCUMENTS

EP	1204157 A2 *	5/2002	H01M/10/40
JP	04-184870	7/1992	
JP	08-022839	1/1996	
JP	08-111238	4/1996	
JP	09-180721	7/1997	
JP	10-055819	2/1998	
JP	10-189038	7/1998	

* cited by examiner

Primary Examiner—Patrick Ryan
Assistant Examiner—Tracy Dove
(74) *Attorney, Agent, or Firm*—McDermott, Will & Emery

(57) **ABSTRACT**

The non-aqueous electrolyte-containing secondary battery of the present invention uses a non-aqueous electrolyte including at least one phosphoric ester derivative expressed by Formula (1): $(R^{1a}O)(R^{2a}O)P(O)X$ and by Formula (2): $R(^{1b}O)P(O)X_2$, wherein R^{1a}, R^{2a}, and R^{1b} independently denote aliphatic hydrocarbon groups having 1 to 12 carbon atoms and X denotes a halogen atom. This arrangement improves the high-temperature storage characteristics after charging and the charge-discharge cycle characteristics of the secondary battery.
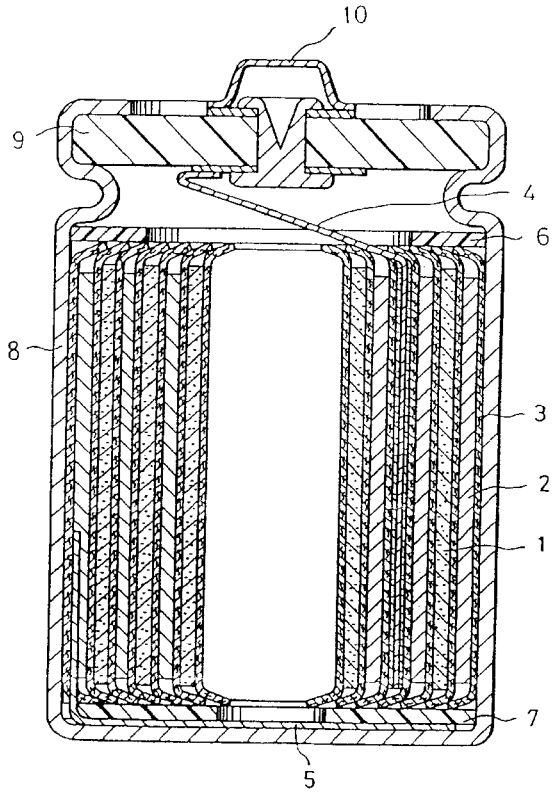
6 Claims, 1 Drawing Sheet