US005379057A

United States Patent [19]

Clough et al.

[11] Patent Number: 5,379,057

[45] Date of Patent: Jan. 3, 1995

[54] **PORTABLE COMPUTER WITH TOUCH SCREEN AND COMPUTER SYSTEM EMPLOYING SAME**

[75] Inventors: **William A. Clough**, Ontario; **Daneil Ouelette**, St. Luc Quebec; **Serge De La Sablonniere**, Ville d'Anjou, all of Canada

[73] Assignee: **Microslate, Inc.**, Brossard, Canada

[21] Appl. No.: **98,219**

[22] Filed: **Jul. 28, 1993**

Related U.S. Application Data

[63] Continuation of Ser. No. 890,311, May 26, 1992, abandoned, which is a continuation of Ser. No. 731,735, Jul. 16, 1991, abandoned, which is a continuation of Ser. No. 271,237, Nov. 14, 1988, abandoned.

[51] **Int. Cl.**[6] **G09G 5/00**; G09G 5/12

[52] **U.S. Cl.** **345/173**; 345/2; 364/705.06; 364/709.11

[58] **Field of Search** 340/706, 712, 724; 341/23; 364/708, 709.01, 709.06, 709.10, 709.11, 709.12, 709.13, 705.06; 178/18; 224/259, 260, 261, 264, 270, 271, 225, 226; 345/2, 173

[56] **References Cited**

U.S. PATENT DOCUMENTS

4,159,417	6/1979	Rubincam	340/706
4,185,282	1/1980	Pick .	
4,202,041	5/1980	Kaplow et al. .	
4,224,615	9/1980	Penz .	
4,291,198	9/1981	Anderson et al. .	
4,332,464	6/1982	Bartulis et al. .	
4,347,956	9/1982	Berger	224/257
4,360,345	11/1982	Hon .	
4,431,870	2/1984	May et al. .	
4,449,186	5/1984	Kelly et al. .	
4,451,895	5/1984	Sliwkowski .	
4,509,526	4/1985	Barnes et al. .	
4,545,023	10/1985	Mizzi .	
4,547,851	10/1985	Kurland .	
4,553,222	11/1985	Kurland et al. .	
4,555,699	11/1985	Citron et al. .	
4,622,437	11/1986	Bloom et al. .	
4,649,499	3/1987	Sutton et al. .	
4,653,086	3/1987	Laube .	
4,659,876	4/1987	Sullivan et al. .	
4,667,299	5/1987	Dunn .	
4,672,558	6/1987	Beckes et al.	340/712
4,725,694	2/1988	Auer et al.	340/712
4,763,356	8/1988	Day, Jr. et al.	340/712
4,775,935	10/1988	Yourick .	
4,782,521	11/1988	Bartlett et al. .	
4,821,029	4/1989	Logan et al.	340/712
4,845,650	7/1989	Meade et al.	364/708
4,928,094	5/1990	Smith	340/712

FOREIGN PATENT DOCUMENTS

0053061	6/1982	European Pat. Off. .	
0271280	6/1988	European Pat. Off. .	
424589	5/1911	France	224/270
2739157	3/1979	Germany .	
2156114	10/1985	United Kingdom .	
2193023	1/1988	United Kingdom .	
8901658	2/1989	WIPO .	

OTHER PUBLICATIONS

Advances in Instrumentation, vol. 42, Part 2, ISA, (Research Triangle Park, N.C., US), P.P. Off: "Human Interface Techniques for Real-Time Global DAta Base Access," pp. 883–890.

(List continued on next page.)

Primary Examiner—Jeffery Brier
Attorney, Agent, or Firm—Cesari and McKenna

[57] **ABSTRACT**

A portable, self-contained, general-purpose, keyboardless computer utilizes a touch screen display for data entry purposes. An application generator allows the user to develop data entry applications by combining the features of sequential libraries, consequential libraries, help libraries, syntax libraries, and pictogram libraries into an integrated data entry application. A run time utility allows the processor to execute the data entry application.
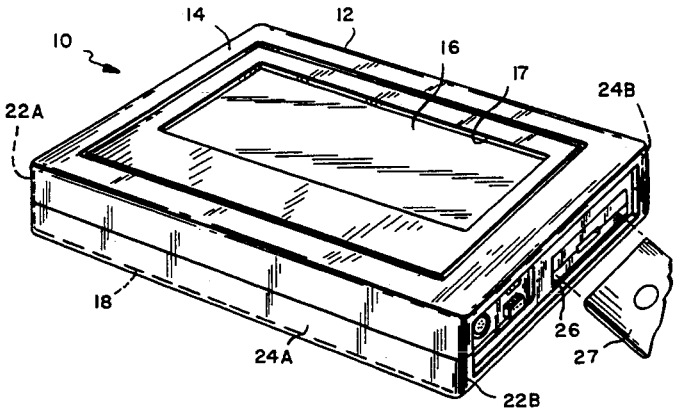
15 Claims, 18 Drawing Sheets