US006477357B1

(12) **United States Patent**
**Cook**

(10) **Patent No.: US 6,477,357 B1**
(45) **Date of Patent: Nov. 5, 2002**

(54) **CUSTOMIZABLE WIRELESS DEVICE HAVING STACKABLE MODULES**

(75) Inventor: **Charles I. Cook**, Louisville, CO (US)

(73) Assignee: **Qwest Communications International, Inc.**, Denver, CO (US)

( * ) Notice: Subject to any disclaimer, the term of this patent is extended or adjusted under 35 U.S.C. 154(b) by 0 days.

(21) Appl. No.: **09/534,793**

(22) Filed: **Mar. 24, 2000**

(51) **Int. Cl.**[7] ..... **H04B 1/38**

(52) **U.S. Cl.** ..... **455/90**; 455/128; 455/575; 455/349; 455/348; 455/369; 361/814

(58) **Field of Search** ..... 455/90, 128; 379/357.01, 379/356.01, 357.02, 357.05; 361/814

(56) **References Cited**

U.S. PATENT DOCUMENTS

5,438,482 A * 8/1995 Nakamura et al. ..... 174/35 R
5,689,823 A * 11/1997 Phillips ..... 455/186.1
5,722,055 A * 2/1998 Kobayashi et al. ..... 455/128
5,832,371 A * 11/1998 Thornton ..... 361/814
6,101,372 A * 8/2000 Kubo ..... 439/354
6,377,825 B1 * 4/2002 Kennedy et al. ..... 455/556
6,397,081 B1 * 5/2002 Franck et al. ..... 455/347
6,405,029 B1 * 6/2002 Nilsson ..... 379/88.03
6,408,068 B1 * 6/2002 Larson et al. ..... 379/353

* cited by examiner

*Primary Examiner*—Thanh Cong Le
*Assistant Examiner*—Andrew T Harry
(74) *Attorney, Agent, or Firm*—Brooks & Kushman, P.C.

(57) **ABSTRACT**

A wireless device such as a wireless telephone includes stackable modules. Each of the modules provides an independent wireless device function. Each of the modules stacks onto and connects to at least one of the other modules. Each of the modules includes a communications contact connected to a communications contact of at least one of the other modules. Each of the modules also includes a power bus contact connected to a power bus contact of at least one of the other modules. The modules include a memory module, a flash memory module, a read only memory (ROM) module, a random access memory (RAM) module, a central processing unit (CPU) module, a display module, a keypad module, a transceiver module, a battery module, a global positioning satellite (GPS) receiver module, and the like. Each of the modules includes keying patterns to ensure that the modules are connected together in a proper order.
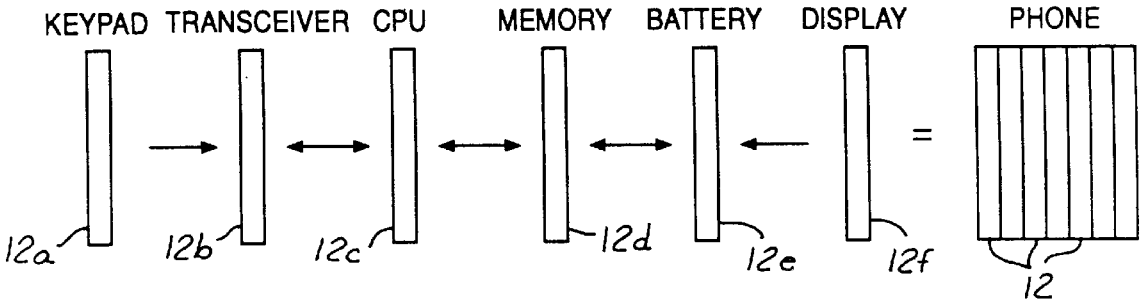
**17 Claims, 1 Drawing Sheet**