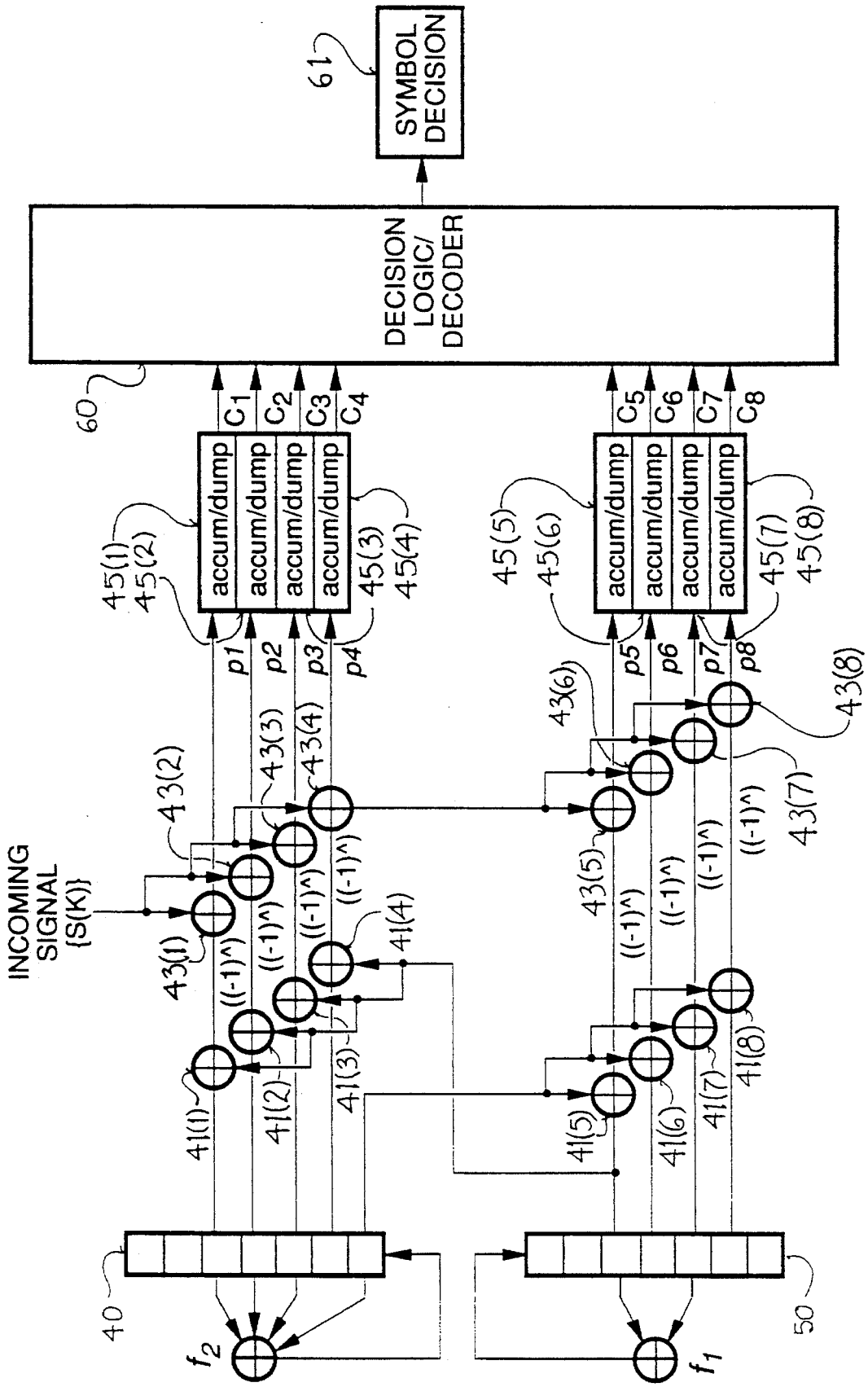
SYMBOL DECISION
61
DECISION LOGIC/ DECODER
60
accum/dump
C1
C2
C3
C4
C5
C6
C7
C8
45(1)
45(2)
45(3)
45(4)
45(5)
45(6)
45(7)
45(8)
p1
p2
p3
p4
p5
p6
p7
p8
43(1)
43(2)
43(3)
43(4)
43(5)
43(6)
43(7)
43(8)
41(1)
41(2)
41(3)
41(4)
41(5)
41(6)
41(7)
41(8)
((-1)^)
INCOMING SIGNAL {S(K)}
40
50
f2
f1

FIG_2