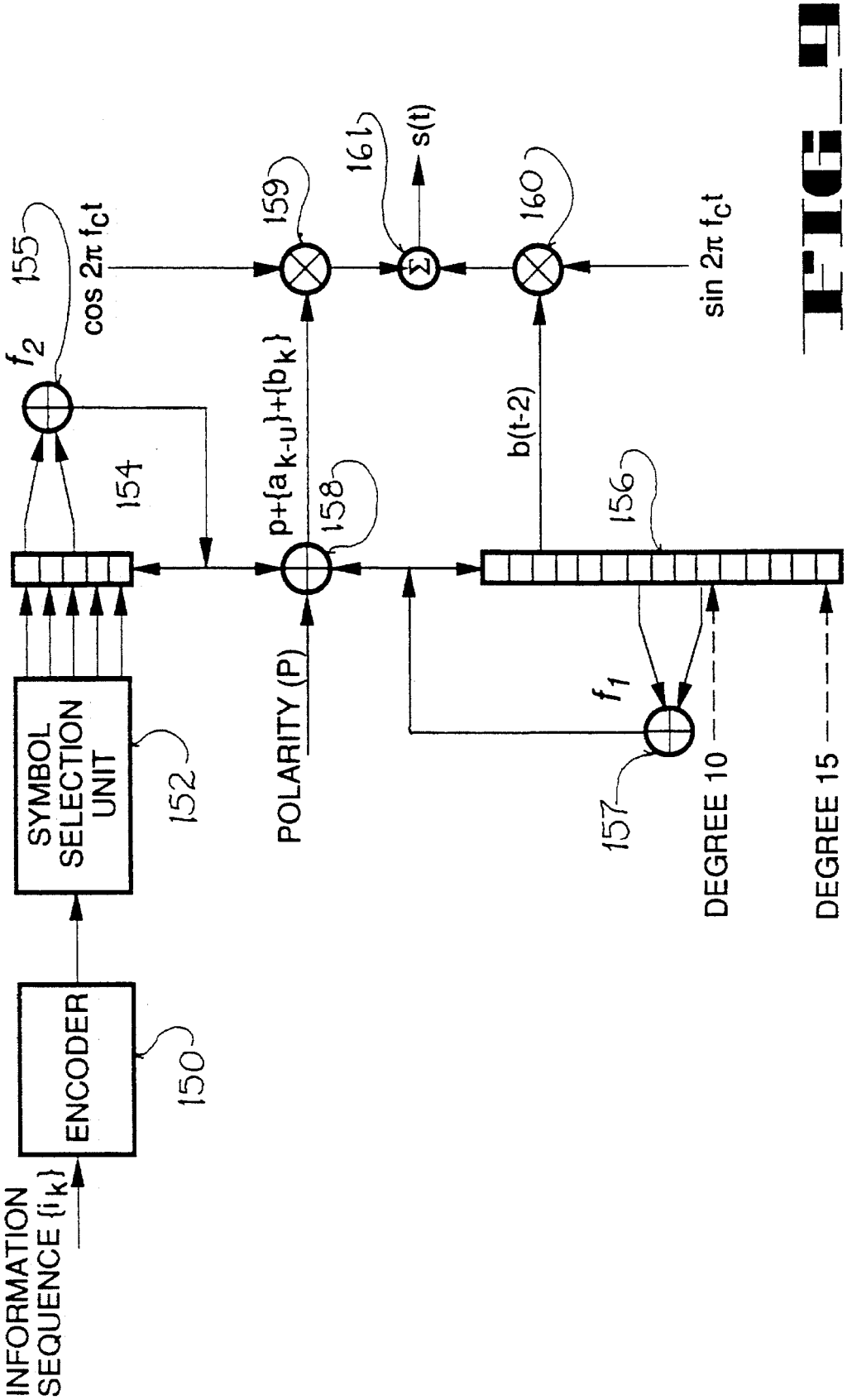
INFORMATION SEQUENCE {i_k}
ENCODER
150
SYMBOL SELECTION UNIT
152
154
155
f_2
cos 2π f_c t
POLARITY (P)
p+{a_{k-u}}+{b_k}
158
159
161
s(t)
160
sin 2π f_c t
b(t-2)
156
f_1
157
DEGREE 10
DEGREE 15

FIG. 9