Aug. 4, 1953 G. J. SELVIN 2,647,557

HEAT SEALING APPARATUS

Filed July 25, 1950 3 Sheets-Sheet 1

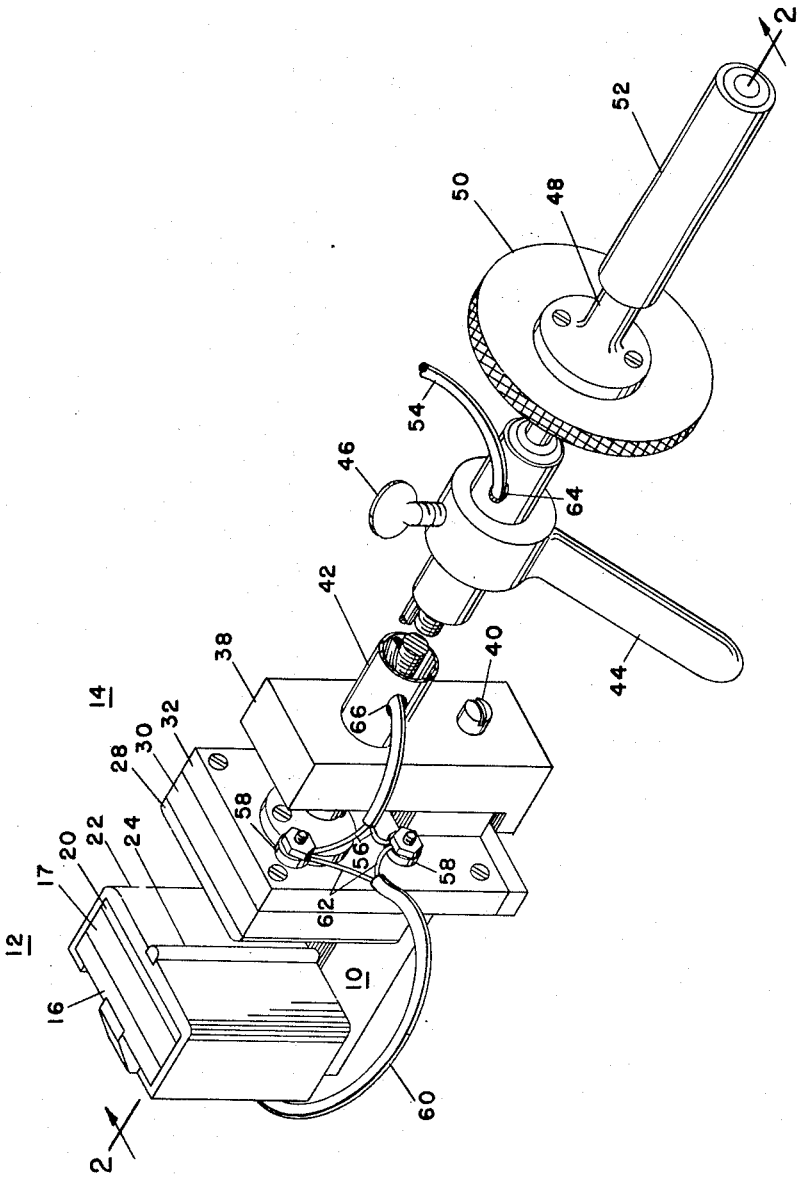

FIG. 1.

INVENTOR.
GERALD J. SELVIN

BY Roland A. Anderson
Attorney