US005437057A

United States Patent [19]

Richley et al.

[11] Patent Number: 5,437,057

[45] Date of Patent: Jul. 25, 1995

[54] WIRELESS COMMUNICATIONS USING NEAR FIELD COUPLING

[75] Inventors: **Edward A. Richley**, Palo Alto; **Lawrence Butcher**, Mountain View, both of Calif.

[73] Assignee: **Xerox Corporation**, Stamford, Conn.

[21] Appl. No.: **984,821**

[22] Filed: **Dec. 3, 1992**

[51] **Int. Cl.**[6] **H04B 5/00**

[52] **U.S. Cl.** **455/41**; 455/33.1; 455/56.1; 455/66; 343/867

[58] **Field of Search** 455/41, 33.1, 33.4, 455/53.1, 54.1, 54.2, 56.1, 66; 370/85.1; 342/742, 867

[56] **References Cited**

U.S. PATENT DOCUMENTS

4,584,707 4/1986 Goldberg et al. 455/41

5,181,200 1/1993 Harrison ..... 455/54.1 X

FOREIGN PATENT DOCUMENTS

0225607A2 6/1987 European Pat. Off. .

0452290A1 10/1991 European Pat. Off. .

61-00033 5/1986 Japan 455/41

2197160 5/1988 United Kingdom .

OTHER PUBLICATIONS

Shrader, R. L.; Electronic Communication, 5th Edition, Jan. 1, 1985 pp. 470–471.

Primary Examiner—Edward F. Urban

Assistant Examiner—Philip J. Sobutka

[57] **ABSTRACT**

Near field coupling is employed for transferring data back and forth between base stations and portable stations in cellular communication systems, such as cellular local area networks.
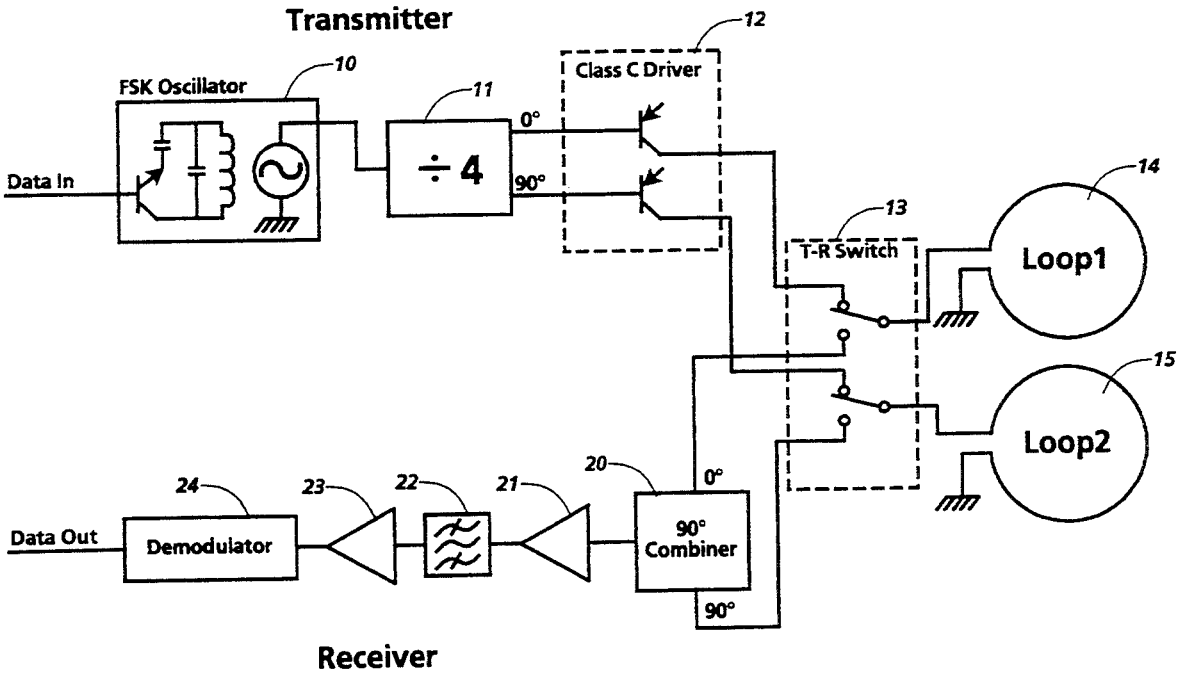
8 Claims, 9 Drawing Sheets