US005335557A

United States Patent [19]

Yasutake

[11] Patent Number: 5,335,557

[45] Date of Patent: Aug. 9, 1994

[54] TOUCH SENSITIVE INPUT CONTROL DEVICE

[76] Inventor: Taizo Yasutake, 776 Danforth Ter., Sunnyvale, Calif. 94807

[21] Appl. No.: 798,572

[22] Filed: Nov. 26, 1991

[51] Int. Cl.[5] G01L 3/00

[52] U.S. Cl. 73/862.043; 73/862.041; 73/862.05

[58] Field of Search 73/862.041, 862.042, 73/862.043, 862.05, 186, 431, 756, 510, 865.7, 727

[56] References Cited

U.S. PATENT DOCUMENTS

3,490,059	1/1970	Paulsen et al.	73/862.043
4,448,083	5/1984	Hayashi	73/862.042
4,550,617	11/1985	Fraignier et al.	73/862.042
4,601,206	7/1986	Watson	73/510 X
4,704,909	11/1987	Grahn et al.	73/862.043
4,811,608	3/1989	Hilton	73/862.05 X
5,178,012	1/1993	Culp	73/510

FOREIGN PATENT DOCUMENTS

0095331	5/1985	Japan	73/862.043
0129635	7/1985	Japan	73/862.043
1292028	12/1986	Japan	73/862.043
1244515	7/1986	U.S.S.R.	73/862.043
2060173	4/1981	United Kingdom	73/862.043

Primary Examiner—Richard E. Chilcot, Jr.
Assistant Examiner—Elizabeth L. Dougherty
Attorney, Agent, or Firm—Michael L. Sherrard

[57] ABSTRACT

A family of controllers incorporate multiple force/-touch sensitive input elements to provide intuitive input in up to six degrees of freedom, including position and rotation, in either a Cartesian, cylindrical or spherical coordinate system. Six dimensions of input can be generated without requiring movement of the controller, which provides a controller suitable for controlling cursors and display objects in an interactive computer system and for equipment such as heavy cranes and fork lift trucks. Positional information is obtained either by use of a "pushing" or "dragging" metaphor. Rotational information is provided by either a "pushing," "twisting," or "gesture" metaphor. In certain embodiments, the same sensor is used for both positional and rotational inputs, and the two are differentiated by the magnitude of the force applied to the sensor.
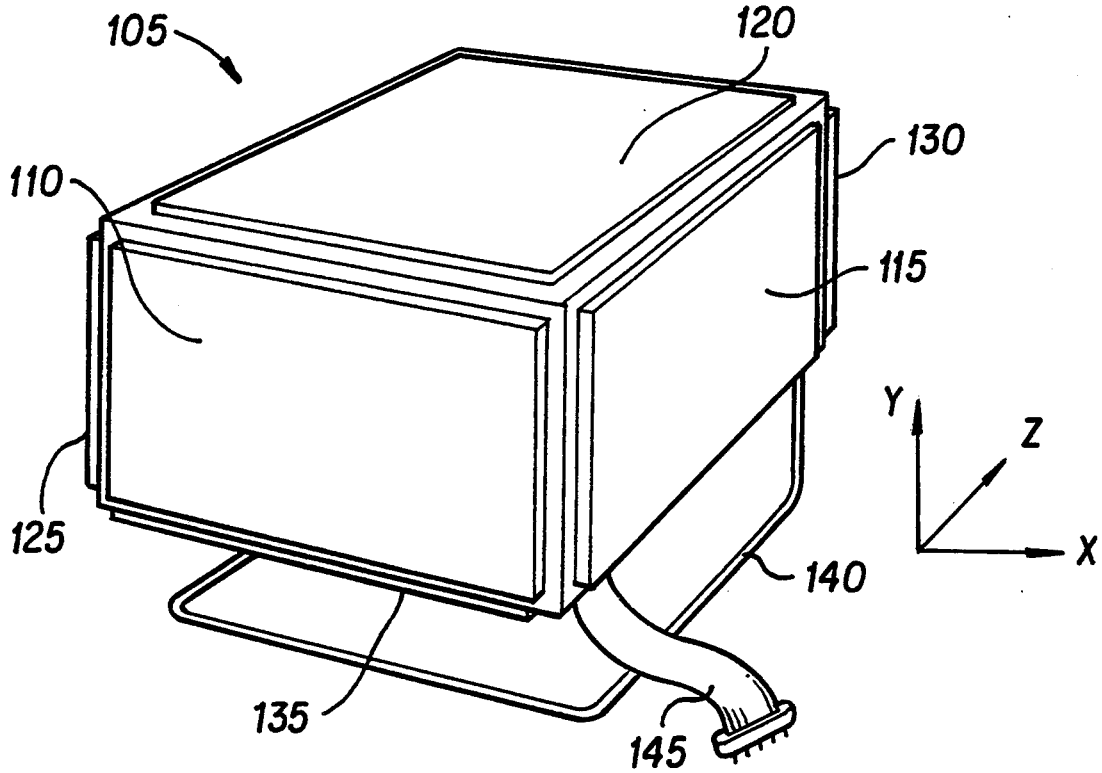
14 Claims, 11 Drawing Sheets