US007520657B2

(12) **United States Patent**
Andrews et al.

(10) **Patent No.: US 7,520,657 B2**
(45) **Date of Patent: Apr. 21, 2009**

(54) **MAGNETIC STIRRER**

(75) Inventors: **Bryan C. Andrews**, Chilton, WI (US); **Darryl B. Detwiler**, Sheboygan, WI (US)

(73) Assignee: **Sigma-Aldrich Co.**, St. Louis, MO (US)

(*) Notice: Subject to any disclaimer, the term of this patent is extended or adjusted under 35 U.S.C. 154(b) by 0 days.

(21) Appl. No.: **11/777,592**

(22) Filed: **Jul. 13, 2007**

(65) **Prior Publication Data**

US 2008/0013400 A1 Jan. 17, 2008

Related U.S. Application Data

(60) Provisional application No. 60/807,452, filed on Jul. 14, 2006.

(51) **Int. Cl.**
B01F 13/08 (2006.01)

(52) **U.S. Cl.** **366/144**; 366/273

(58) **Field of Classification Search** 366/273, 366/274, 144

See application file for complete search history.

(56) **References Cited**

U.S. PATENT DOCUMENTS

2,810,556 A * 10/1957 Zozulin 366/274
3,384,353 A * 5/1968 Worth 366/274
3,744,764 A 7/1973 Sedam
4,752,138 A * 6/1988 Rufer 366/274
4,756,625 A 7/1988 Schultz
5,261,742 A 11/1993 Lockhart
5,478,149 A * 12/1995 Quigg 366/273
5,586,823 A * 12/1996 Carr 366/274
5,834,739 A * 11/1998 Lockwood et al. 219/468.1
6,585,405 B2 * 7/2003 Bruno et al. 366/266
6,758,593 B1 * 7/2004 Terentiev 366/273
6,793,167 B2 * 9/2004 Karkos et al. 241/101.2
2005/0023016 A1 * 2/2005 Nakamizo 173/93.5
2006/0221765 A1 * 10/2006 Andersson 366/273
2007/0036027 A1 * 2/2007 Meier 366/273

* cited by examiner

Primary Examiner—Tony G Soohoo
(74) *Attorney, Agent, or Firm*—Senniger Powers LLP; Jill Rogers-Manning

(57) **ABSTRACT**

A magnetic stirring system includes a stir-mantle and a magnetic stirring apparatus used for stirring/mixing materials in a flask. A rare-earth magnet is mounted on the magnetic stirring apparatus and is driven in rotation by a pneumatic motor. The rare-earth magnet is coupled to a magnetic stir bar in the flask for conjoint rotation so that the stir-bar stirs/mixes the materials in the flask. An exhaust is included to channel air from the motor to the rare-earth magnet and to direct the air to flow over the magnet to control the temperature of the magnet.
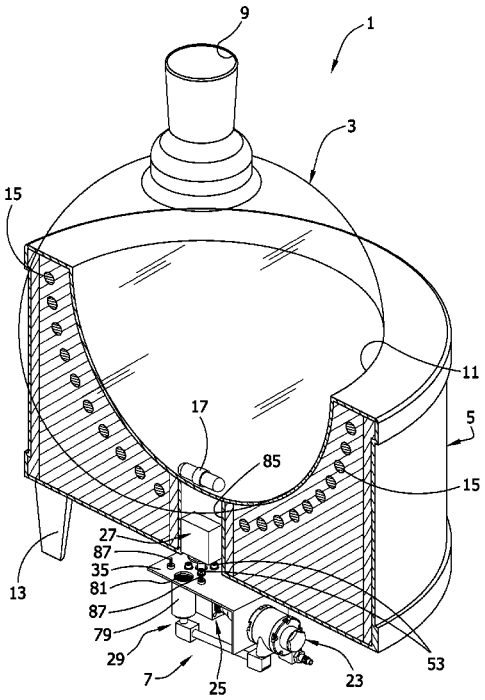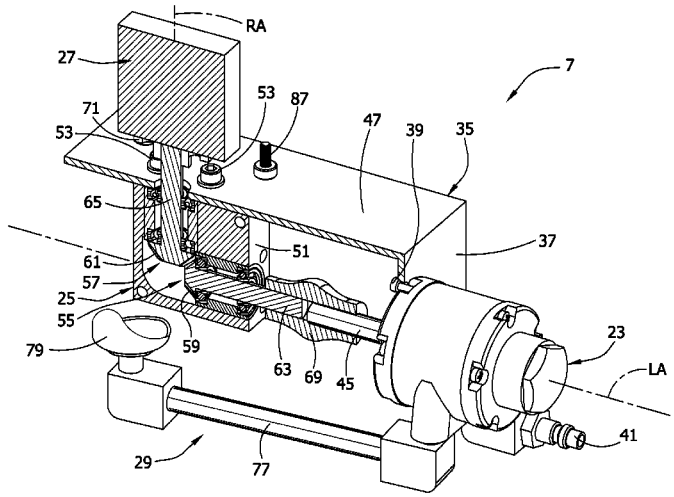
18 Claims, 10 Drawing Sheets