June 2, 1970 J. F. DILLON, JR 3,515,457

MAGNETICALLY-CONTROLLED BEAM DEFLECTOR

Filed Jan. 12, 1968

FIG. 1

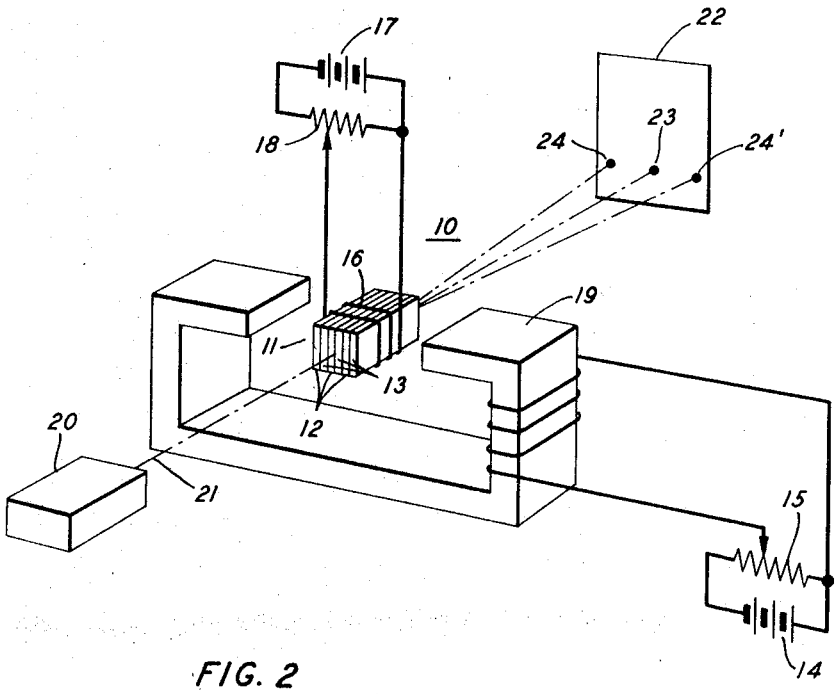

FIG. 2

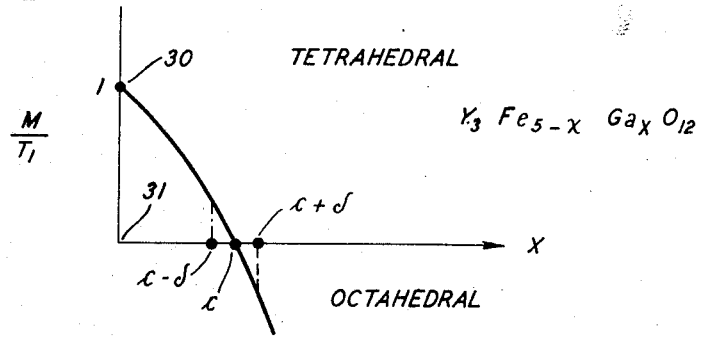

FIG. 3

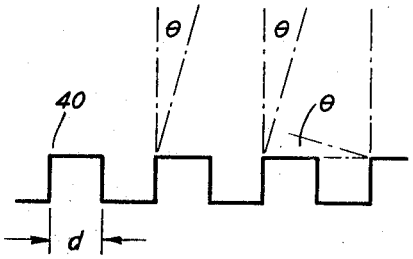

INVENTOR
J. F. DILLON, JR.
BY Kenneth W Mateer
ATTORNEY