Dec. 10, 1968 W. J. VAN NATTER 3,415,357

SELF-CONTAINED TENNIS BALL STORAGE CONTAINER AND PRESSURIZING DEVICE

Filed Dec. 26, 1967 2 Sheets-Sheet 1

Fig. 1.

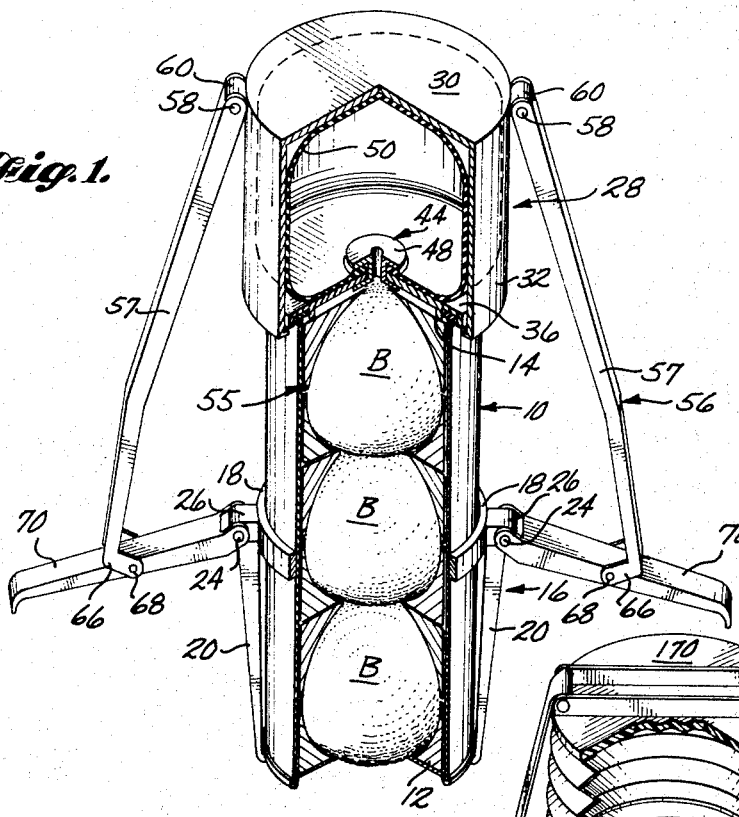

Fig. 2.

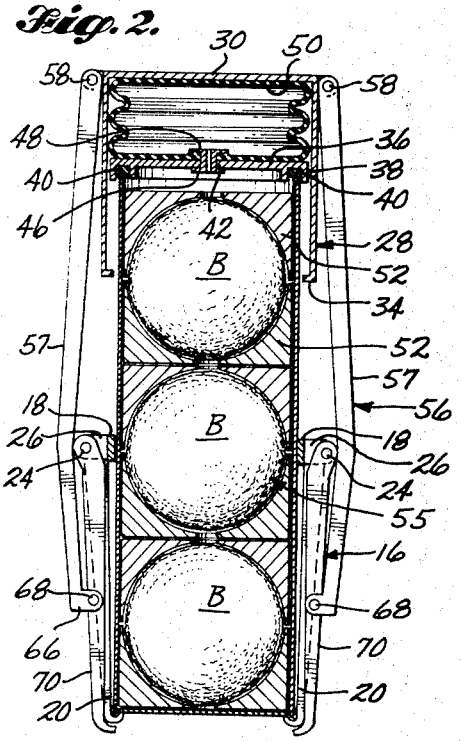

Fig. 7.

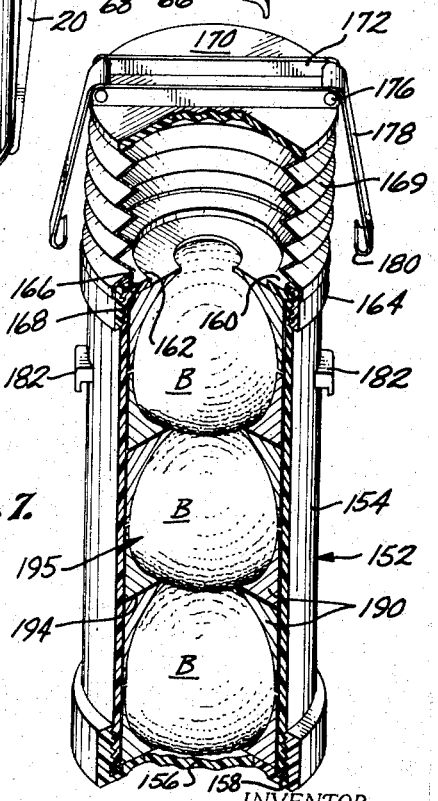

INVENTOR.
WILLIAM J. VAN NATTER

BY Stanford, Cole & Barnard
ATTORNEYS