US009410657B2

(12) **United States Patent**
Vogelaar et al.

(10) **Patent No.: US 9,410,657 B2**
(45) **Date of Patent: Aug. 9, 2016**

(54) **ADJUSTABLE CHOCK**

(71) Applicants: **Dick Vogelaar**, Zwijndrecht (NL); **Marco Westerman**, Zoetermeer (NL)

(72) Inventors: **Dick Vogelaar**, Zwijndrecht (NL); **Marco Westerman**, Zoetermeer (NL)

(73) Assignee: **AKTIEBOLAGET SKF**, Gothenburg (SE)

(*) Notice: Subject to any disclaimer, the term of this patent is extended or adjusted under 35 U.S.C. 154(b) by 0 days.

(21) Appl. No.: **14/407,069**

(22) PCT Filed: **Jun. 4, 2013**

(86) PCT No.: **PCT/EP2013/061493**
§ 371 (c)(1),
(2) Date: **Dec. 11, 2014**

(87) PCT Pub. No.: **WO2013/186088**
PCT Pub. Date: **Dec. 19, 2013**

(65) **Prior Publication Data**

US 2015/0345692 A1 Dec. 3, 2015

(30) **Foreign Application Priority Data**

Jun. 11, 2012 (WO) PCT/EP2012/060991

(51) **Int. Cl.**
F16M 7/00 (2006.01)
F16B 5/02 (2006.01)
(Continued)

(52) **U.S. Cl.**
CPC . ***F16M 7/00*** (2013.01); ***F16M 5/00*** (2013.01); ***F16M 11/04*** (2013.01); *B23Q 1/0054* (2013.01); *F16B 5/0225* (2013.01); *F16B 5/0233* (2013.01)

(58) **Field of Classification Search**
CPC F16M 7/00; F16M 5/00; F16M 11/04; B23Q 1/0054; F16B 5/0225; F16B 5/0233
USPC 248/651, 677, 188.2; 92/15
See application file for complete search history.

(56) **References Cited**

U.S. PATENT DOCUMENTS

1,380,347 A * 6/1921 Blume F16B 5/0216 248/188.1
3,361,410 A * 1/1968 Messer F16M 7/00 248/188.4
3,791,703 A * 2/1974 Ifield F01B 3/0073 384/117
(Continued)

FOREIGN PATENT DOCUMENTS

DE 2203381 A1 8/1973
EP 0316283 A1 5/1989
(Continued)

Primary Examiner — Anita M King
(74) *Attorney, Agent, or Firm* — Bryan Peckjian; SKF USA Inc. Patent Dept.

(57) **ABSTRACT**

An adjustable chock for levelling and anchoring a machine to a foundation. The chock comprises a base element, a center element and a spherical washer, each is rotationally symmetric about a center axis. The center element is axially translational relative to the base element. The base element or the center element includes a mating surface for receiving the spherical washer. The chock has a center through hole for receiving an anchor bolt. The base element comprises an hydraulic connection point and a channel for hydraulic fluid. The channel is in connection with a chamber enclosed between surfaces of the center element and the base element, wherein in use, filling the chamber with hydraulic fluid exerts an axial pressure on the center element, causing an axial translation of the center element relative to the base element.
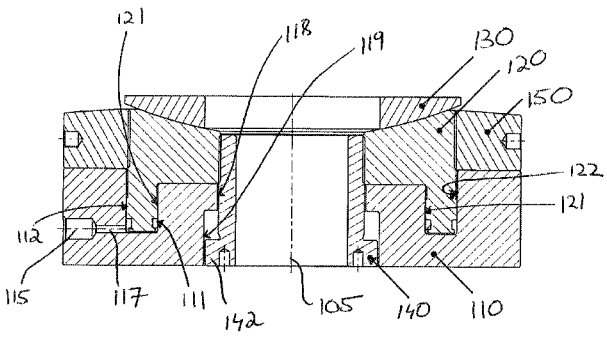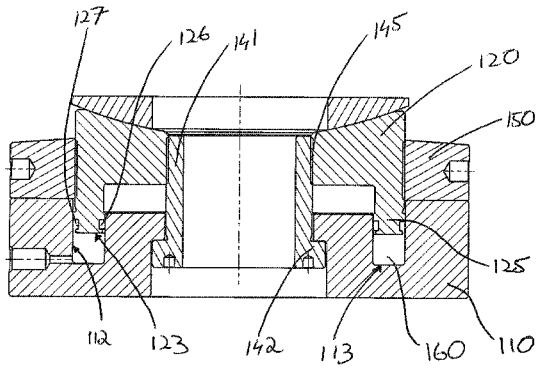
6 Claims, 2 Drawing Sheets