US009410257B2

(12) **United States Patent**
Marchal

(10) **Patent No.: US 9,410,257 B2**
(45) **Date of Patent: Aug. 9, 2016**

(54) **TUBULAR ELECTROCHEMICAL CELL**

(75) Inventor: **Frederic Marchal**, Sheffield (GB)

(73) Assignee: **ITM POWER (RESEARCH) LIMITED**, Sheffield, South Yorkshire (GB)

(*) Notice: Subject to any disclaimer, the term of this patent is extended or adjusted under 35 U.S.C. 154(b) by 330 days.

(21) Appl. No.: **13/392,951**

(22) PCT Filed: **Sep. 15, 2010**

(86) PCT No.: **PCT/GB2010/051548**

§ 371 (c)(1),
(2), (4) Date: **Apr. 18, 2012**

(87) PCT Pub. No.: **WO2011/033299**

PCT Pub. Date: **Mar. 24, 2011**

(65) **Prior Publication Data**

US 2012/0193242 A1 Aug. 2, 2012

(30) **Foreign Application Priority Data**

Sep. 16, 2009 (GB) 0916179.5

(51) **Int. Cl.**

C25B 9/08	(2006.01)
C25B 9/18	(2006.01)
C25B 9/10	(2006.01)
H01M 8/00	(2016.01)
H01M 8/10	(2016.01)
H01M 8/24	(2016.01)
C25B 1/12	(2006.01)

(52) **U.S. Cl.**

CPC ... ***C25B 9/10*** (2013.01); ***C25B 9/08*** (2013.01); ***C25B 9/18*** (2013.01); ***H01M 8/004*** (2013.01); ***H01M 8/1004*** (2013.01); ***H01M 8/241*** (2013.01); *H01M 2008/1095* (2013.01); *Y02E 60/521* (2013.01)

(58) **Field of Classification Search**

USPC 204/260

See application file for complete search history.

(56) **References Cited**

U.S. PATENT DOCUMENTS

4,879,016	A	*	11/1989	Joshi	204/242
4,957,673	A	*	9/1990	Schroeder et al.	264/643
6,001,500	A		12/1999	Bass et al.	
6,060,188	A	*	5/2000	Muthuswamy et al.	429/494
7,837,842	B1	*	11/2010	Mayers et al.	204/266

(Continued)

FOREIGN PATENT DOCUMENTS

EP	1528126	A1	4/2005
EP	2040324	A1	3/2009
EP	2086041	A1	5/2009
TW	200847509	A	12/2008

(Continued)

OTHER PUBLICATIONS

Database WPI, "Electrode structure for fuel cell," Accession No. 2009-L12954, Dec. 1, 2008.

Primary Examiner — Harry D Wilkins, III

(74) *Attorney, Agent, or Firm* — Saliwanchik, Lloyd & Eisenschenk

(57) **ABSTRACT**

A membrane electrode assembly (MEA) comprises substantially concentric and tubular-shaped layers of a cathode, an anode and an ion-exchange membrane. The MEAs of the invention can be used in an electrochemical cell, which comprises the following layers which are tubular-shaped, arranged substantially concentrically, and listed from the inner layer to the outer layer; (i) a cylindrical core; (ii) one of the electrodes; (iii) a membrane; (iv) the other of the electrodes; and (v) an outer cylindrical sleeve.
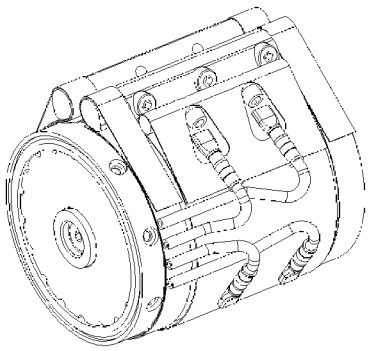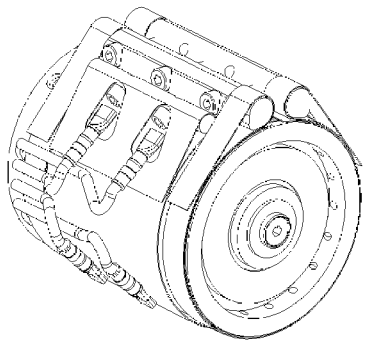
18 Claims, 15 Drawing Sheets