US009408457B2

(12) **United States Patent**
Debnam

(10) **Patent No.: US 9,408,457 B2**
(45) **Date of Patent: Aug. 9, 2016**

(54) **HANDS-FREE BAG CARRYING DEVICE**

(71) Applicant: **Antwaine Debnam**, Hartford, CT (US)

(72) Inventor: **Antwaine Debnam**, Hartford, CT (US)

(73) Assignee: **Antwaine Debnam**, Hartford, CT (US)

(*) Notice: Subject to any disclaimer, the term of this patent is extended or adjusted under 35 U.S.C. 154(b) by 0 days.

(21) Appl. No.: **14/751,229**

(22) Filed: **Jun. 26, 2015**

(65) **Prior Publication Data**

US 2015/0366331 A1 Dec. 24, 2015

Related U.S. Application Data

(63) Continuation-in-part of application No. 13/912,794, filed on Jun. 7, 2013, now abandoned.

(51) **Int. Cl.**

A45F 3/10	(2006.01)
A45F 5/10	(2006.01)
A45F 3/14	(2006.01)

(52) **U.S. Cl.**

CPC . ***A45F 5/102*** (2013.01); ***A45F 3/14*** (2013.01); ***A45F 5/1026*** (2013.01); *A45F 2003/142* (2013.01)

(58) **Field of Classification Search**

CPC A45F 3/02; A45F 3/10; A45F 2003/003
See application file for complete search history.

(56) **References Cited**

U.S. PATENT DOCUMENTS

2,132,556	A		10/1938	Blackshaw	
4,091,974	A		5/1978	McClintock	
4,119,249	A	*	10/1978	Hanson	A45C 11/00 224/236
4,324,205	A		4/1982	Goldmacher	
4,402,440	A		9/1983	Purtzer et al.	
4,420,104	A	*	12/1983	Dilenno	A45F 5/021 224/250
4,480,775	A		11/1984	Stanford	
5,044,538	A	*	9/1991	Bader	A45F 3/14 224/250
5,158,332	A		10/1992	Goulter et al.	
5,178,309	A		1/1993	Bicheler et al.	
5,267,680	A	*	12/1993	Torok	A47D 13/02 224/158
5,437,403	A	*	8/1995	Lemanski, II	A45F 3/02 224/603
5,439,154	A	*	8/1995	Delligatti	A45C 9/00 150/106
5,497,923	A		3/1996	Pearson et al.	
5,669,170	A	*	9/1997	Norris	F41C 33/00 224/150
5,690,261	A	*	11/1997	Moore	A45F 3/14 206/278
5,695,101	A		12/1997	Frietze	
5,775,495	A		7/1998	Lang	
6,179,175	B1		1/2001	Painter	
6,267,277	B1	*	7/2001	Taylor	A45C 7/0095 206/350
6,311,884	B1		11/2001	Johnson	
6,533,150	B1	*	3/2003	Margo	A45F 5/021 224/148.1
6,832,711	B2		12/2004	Black	
8,062,194	B2		11/2011	Weiss	
8,225,973	B1		7/2012	Bellinson	
8,496,143	B1		7/2013	Joseph	
8,690,035	B2		4/2014	Silverman	
2001/0040177	A1	*	11/2001	Hammond	A45B 11/02 224/188
2002/0148866	A1		10/2002	Dent, III	
2006/0113344	A1	*	6/2006	Cragg	A45F 5/02 224/579

(Continued)

Primary Examiner — Brian D Nash
(74) *Attorney, Agent, or Firm* — Bachman & LaPointe, P.C.

(57) **ABSTRACT**

A hands-free bag carrying device is used to carry articles, such as bags, umbrellas, jackets and the like, without the use of a user's hands. The device secures snuggly around the user's torso and allows for optimal leveraging of the baggage load so that there is minimal interference with the normal walking stride of the user. The device also prevents the baggage from rubbing the legs of the user.
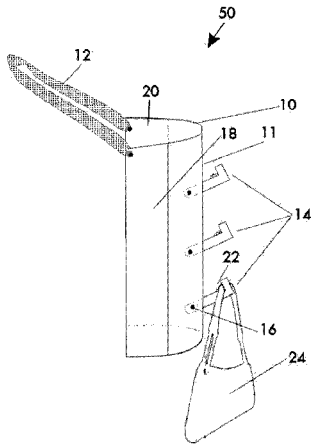
7 Claims, 6 Drawing Sheets