CORNEAL CONTACT LENS HAVING STOP FLANGE ENGAGED BY EYELIDS

Filed Jan. 2, 1959 2 Sheets-Sheet 1

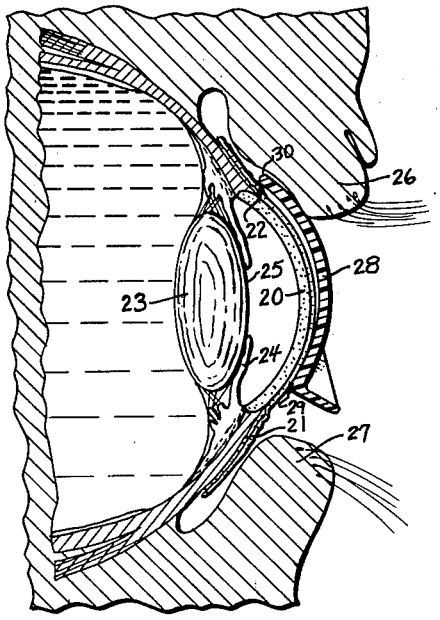

Fig. 1

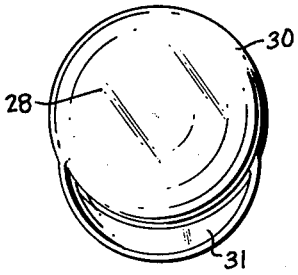

Fig 3

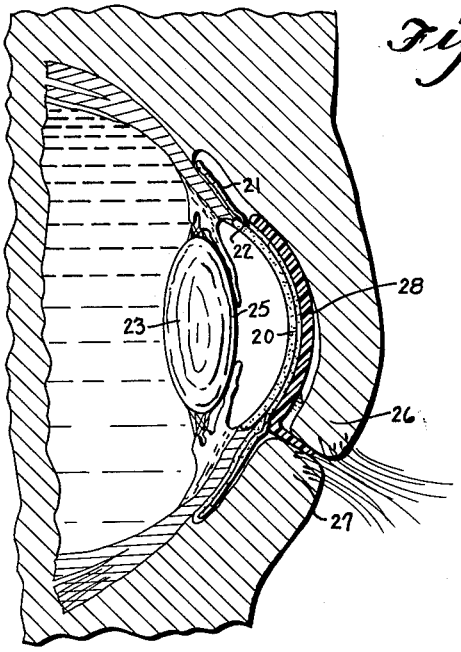

Fig. 2

Fig. 4

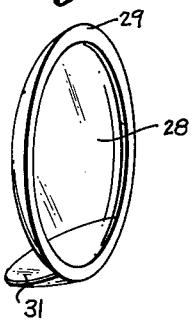

INVENTOR.
ELMER L. GAMBER
BY Barnes & Seed
ATTORNEYS