US005601557A

United States Patent [19]

Hayhurst

[11] **Patent Number: 5,601,557**

[45] **Date of Patent: Feb. 11, 1997**

[54] **ANCHORING AND MANIPULATING TISSUE**

[76] Inventor: **John O. Hayhurst**, 14751 SE. Wanda Dr., Milwaukie, Oreg. 97222

[21] Appl. No.: **715,113**

[22] Filed: **Jun. 12, 1991**

Related U.S. Application Data

[60] Division of Ser. No. 192,813, Apr. 20, 1988, abandoned, which is a continuation-in-part of Ser. No. 848,341, Apr. 4, 1986, Pat. No. 4,741,330, which is a continuation of Ser. No. 496,116, May 19, 1983, abandoned, which is a continuation-in-part of Ser. No. 380,043, May 20, 1982, abandoned.

[51] **Int. Cl.**[6] **A61B 17/56**; A61B 17/04

[52] **U.S. Cl.** **606/72**; 606/144

[58] **Field of Search** 606/90, 88, 103, 606/144, 146, 148, 149, 150, 151, 152, 153, 155–157, 216, 217, 222–226, 232, 233, 75, 72, 73, 74, 220; 411/340, 508–511, 904

[56] **References Cited**

U.S. PATENT DOCUMENTS

2,562,419	4/1948	Ferris .	
2,669,774	1/1955	Livingston .	
3,103,666	9/1963	Bone .	
3,123,077	3/1964	Alcamo .	
3,399,432	9/1968	Mercer .	
3,470,834	10/1969	Bone .	
3,527,233	9/1970	Shein .	
3,570,497	3/1971	Lemole	606/74
3,695,271	10/1972	Chodorow	128/85
3,699,969	10/1972	Allen .	
3,716,058	2/1973	Tanner .	
3,845,772	11/1974	Smith	606/232
3,875,648	4/1975	Bone .	
3,910,281	10/1975	Kletschka .	
3,931,667	1/1976	Mercer .	
3,990,619	11/1976	Russell .	
4,006,747	2/1977	Kronenthal .	
4,013,071	3/1977	Rosenberg .	
4,235,238	11/1980	Ogiu	606/145
4,275,490	6/1981	Bivins	606/72
4,275,717	6/1981	Bolesky .	
4,287,807	9/1981	Pacharis .	
4,291,698	9/1981	Fuchs .	
4,409,974	10/1983	Freeland	606/232
4,454,875	6/1984	Pratt .	
4,462,395	7/1984	Johnson .	
4,469,101	9/1984	Coleman	606/151
4,493,323	1/1985	Albright	606/144
4,590,928	5/1986	Hunt .	
4,602,635	7/1986	Mulhollan .	
4,632,100	12/1986	Somers	606/73
4,667,675	5/1987	Davis	606/233
4,669,473	6/1987	Richards	606/20
4,708,132	11/1987	Silvestrini	606/86
4,738,255	4/1988	Goble .	
4,776,328	10/1988	Frey .	

FOREIGN PATENT DOCUMENTS

0129422	12/1984	European Pat. Off. .
0241240	4/1986	European Pat. Off. .
2118474	4/1982	United Kingdom .
86/03666	7/1986	WIPO .

Primary Examiner—Michael A. Brown

Attorney, Agent, or Firm—Klarquist Sparkman Campbell Leigh & Whinston, LLP

[57] **ABSTRACT**

A method whereby an anchor member is configured to provide anchorage of its attached suture within a hole drilled in a bone.
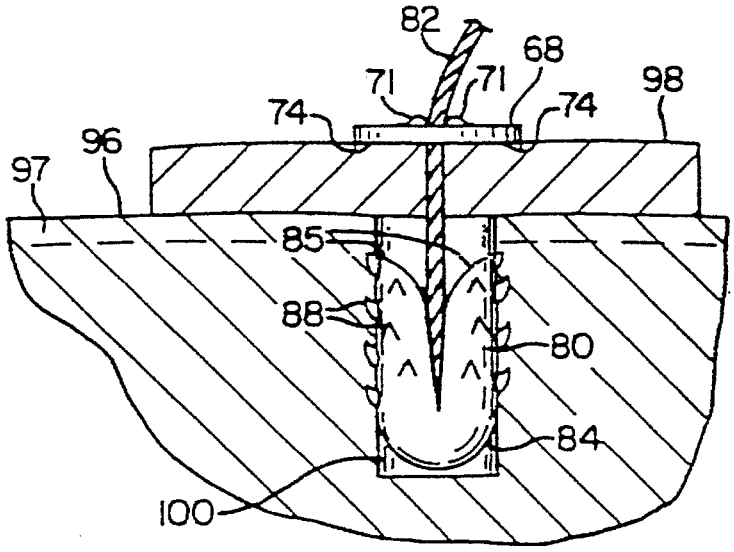
7 Claims, 3 Drawing Sheets